KENDALL COUNTY
STORMWATER MANAGEMENT OVERSIGHT COMMITTEE
PUBLIC HEARING

111 West Fox Street • Room 209 and 210 • Yorkville, IL • 60560
(630) 553-4141 Fax (630) 553-4179

AGENDA

June 18, 2024 – 9:00 a.m.

CALL TO ORDER

ROLL CALL: Zach Bachman, Brian DeBolt, Elizabeth Flowers, Scott Gengler (Vice-Chair), Matt Kellogg (Chair), Dan Koukol, Jason Peterson, Brooke Shanley, Ruben Rodriguez, and Seth Wormley

APPROVAL OF AGENDA (VV)

APPROVAL OF MINUTES (VV) October 12, 2023, Public Hearing/Meeting (Pages 2-3)

PUBLIC COMMENT

OPEN OF STORMWATER MANAGEMENT OVERSIGHT COMMITTEE PUBLIC HEARING

ITEMS OF BUSINESS FOR PUBLIC HEARING (ROLL CALL VOTE) (Pages 4-60)

1. **Petition 24-15 Kendall County Forest Preserve District**

Request	Stormwater Management Variance
Location	Subat Forest Preserve (4845 Eldamain Road, Plano) in Little Rock Township
PINs	01-25-400-009, 01-36-200-022, and 01-36-200-025
Purpose	Request for Approval of a Variance to Section 203 of the Kendall County Stormwater Management Ordinance Regarding Applicability of Site Runoff Storage Requirements. The Petitioner Requests a Variance that Allows Exclusion of the Impervious Trail Sections of the Subat Forest Preserve Nature Center Project in the Calculation of Total Impervious Improvements Resulting in No Stormwater Detention Requirement for the Project. The Petitioner Requests a Variance from Site Runoff Storage Requirements to Avoid Unnecessary Disturbance of Restored Prairie Habitats and Native Trees that Reside within Subat Forest Preserve.

CLOSE OF STORMWATER MANAGEMENT OVERSIGHT COMMITTEE PUBLIC HEARING

OTHER BUSINESS

ADJOURNMENT (VV)

If special accommodations or arrangements are needed to attend this County meeting, please contact the Administration Office at 630-553-4171, a minimum of 24-hours prior to the meeting time.

KENDALL COUNTY
STORMWATER OVERSIGHT COMMITTEE
PUBLIC HEARING
Kendall County Office Building
Rooms 209 & 210
111 W. Fox Street, Yorkville, Illinois
Meeting Minutes of October 12, 2023 – Unofficial Until Approved
4:00 p.m.

CALL TO ORDER
Chairman Kellogg called the Stormwater Oversight Committee Public Hearing to order at 4:00 p.m.

ROLL CALL
Committee Members Present: Zach Bachman, Brian DeBolt, Scott Gengler, Matt Kellogg, Dan Koukol, Jason Peterson, Ruben Rodriguez (Arrived at 4:04 p.m.), Brooke Shanley, and Seth Wormley (Arrived at 4:04 p.m.)

Committee Members Absent: Elizabeth Flowers

Also present: Matt Asselmeier, Ryan Zaborowski, Christina Burns, Greg Chismark, and Stasi Brown

APPROVAL OF AGENDA
Member DeBolt made a motion, seconded by Member Peterson, to approve the agenda as presented. With a voice vote of seven (7) ayes, the motion carried.

APPROVAL OF MINUTES
Member Gengler made a motion, seconded by Member Bachman, to approve the minutes of the October 13, 2022, public hearing and meeting. With a voice vote of seven (7) ayes, the motion carried.

PUBLIC COMMENT
None

OPEN OF STORMWATER MANAGEMENT OVERSIGHT COMMITTEE PUBLIC HEARING
Chairman Kellogg opened the Stormwater Management Oversight Committee Public Hearing at 4:01 p.m.

Comments on Stormwater Management Related Regulations and Enforcement
Mr. Asselmeier read a memo regarding stormwater related activities since the October 2022 hearing/meeting. He noted the funds in the stormwater fee-in-lieu accounts, the statistics on stormwater management permits for the year, the status of WBK Engineering's review of the

State's floodplain regulations, updates on stormwater ordinance violation investigations, and provided the survey results from the 2023 NPDES survey to the townships.

Mr. Asselmeier also provided draft comments from WBK Engineering regarding the removal of several dams along the Fox River. He noted WBK Engineering's concerns related to increased sedimentation at the Yorkville dam because of the removal of the dams upstream.

Members Rodriguez and Wormley arrived at this time (4:04 p.m.).

Member DeBolt asked about ordinance enforcement procedure. Mr. Asselmeier explained the enforcement procedure for stormwater ordinance violations, from warning notice to court procedures in cases of non-compliance.

Member Gengler asked about the frequency of dam removals. Mr. Asselmeier responded that dam removals by the Corps of Engineers are rare.

Proposed Changes to the Kendall County Stormwater Management Ordinance
Mr. Asselmeier said that Staff had no proposed changes at this time.

No other proposed changes were presented by the Committee or members of the public.

CLOSE OF ANNUAL STORMWATER MANAGEMENT OVERSIGHT COMMITTEE PUBLIC HEARING
Chairman Kellogg closed the Stormwater Management Oversight Committee Public Hearing at 4:05 p.m.

OTHER BUSINESS
None

ADJOURNMENT
Member Koukol made a motion, seconded by Member Shanley, to adjourn the meeting. With a voice vote of nine (9) ayes, the motion carried. The Stormwater Management Oversight Committee adjourned at 4:05 p.m.

Respectfully submitted,
Matthew H. Asselmeier, AICP, CFM
Director

Kendall County Agenda Briefing

Meeting Type: Other Committee

Meeting Date: 6/18/2024

Subject: Approval of Petition 24-15, Stormwater Ordinance Variance for Subat Forest Preserve

Prepared by: Matthew H. Asselmeier, AICP, CFM

Department: Planning, Building and Zoning

Action Requested:

Approval of Petition 24-15, A Request from the Kendall County Forest Preserve District for a Variance to Section 203 of the Kendall County Stormwater Management Ordinance Regarding Applicability of Site Runoff Storage Requirements at the Subat Forest Preserve Located at 4845 Eldamain Road, Plano (PINs: 01-25-400-009, 01-36-200-022, and 01-36-200-025) in Little Rock Township

Previous Board/Committee Review:

N/A

Fiscal impact:

N/A

Background and Discussion:

The Petitioner requests a variance that allows exclusion of the impervious trail sections of the Subat Forest Preserve Nature Center Project in the calculation of total impervious improvements resulting in no stormwater detention requirement for the project. The Petitioner requests a variance from site runoff storage requirements to avoid unnecessary disturbance of restored prairie habitats and native trees that reside within Subat Forest Preserve.

Per the application, “the project has an impervious area of 36,850 sf. Under current project conditions, the Ordinance requires detention for developments resulting in an impervious area of greater than 32,000 sf. The trail section of the project constitutes 19,930 sf of impervious area or approximately 54% of the total impervious area of the project.”

Greg Chismark, from WBK Engineering, reviewed the proposal and recommended approval. As of the date this memo, the four (4) outstanding items noted in Greg Chismark’s letter that needed to be resolved in order to issue the stormwater permit remained unresolved.

The property previously obtained stormwater permits in 2003 for the installation of the parking lot, picnic shelter, and overlook platform and in 2005 for wetland restoration.

Based on the information provided by the Petitioner and WBK, Staff believes that the following findings of fact as required by Section 904.1 of the Kendall County Stormwater Management Ordinance have been met:

1. The variance will not increase the probability of flood damage or create an additional threat to the public health, safety or welfare.

2. The variance requested is the minimum relief necessary to accomplish the objectives of the development without compromising the objectives of Section 102 of the Kendall Stormwater Management Ordinance.

3. The variance will not result in a reduction of water quality benefits as compared to compliance with ordinance requirements.

4. The variance is not requested solely for the purpose of reducing site runoff storage requirements.

5. The variance shall not cause conveyance of stormwater from the project to increase peak discharges beyond design capacity of existing offsite conveyance facilities for any storm event from the 2-year to the 100-year recurrence frequency.

6. The variance shall seek to preserve valuable environmental and biological resources including but not limited to stands of native trees, existing wetlands and natural floodplain storage.

Staff Recommendation:

Approval with Conditions

Attachments:

Application Materials

WBK Comment Letter Dated May 30, 2024

Draft Ordinance

May 7, 2024

Kendall County Department of Planning, Building, & Zoning
111 West Fox Street
Yorkville, Illinois, 60560

SUBJECT: **Subat Nature Center**
Kendall County Forest Preserve District
ERA Project #W23229.00

ERA is pleased to submit this stormwater permit application submittal for the renovation of Subat Nature Center. Enclosed you will find plans, exhibits, and a narrative describing the proposed work for this project.

All work has been completed by me or someone directly under my supervision, and this sheet signed and sealed will encompass all documents pertaining to the report.

I appreciate the opportunity for your review of this project.

Sincerely,

[redacted]

John Mayer, P.E., CFM
Project Manager

[redacted]

Expires: November 30, 2025

Existing Site Description

The project area is a nature preserve on three parcels owned by the Kendall County Forest Preserve District: 01-25-400-009, 01-36-200-022, and 01-36-200-025. Kendall County GIS indicates that the total property acreage is 67.27 acres. It is noted that disturbance of the property will be limited to approximately 1.63 acres.

The existing site includes a gravel parking lot, shelter, restroom building, and associated aggregate paths. Stormwater drainage directions vary across the property, with some areas draining south and west toward Rob Roy Creek, some areas draining toward on-site wetlands, and some areas draining south toward River Road.

There are no regulatory floodplain areas on the project site, as shown in Exhibit 5. ERA completed a wetland delineation of the project area on September 22, 2023 which identified on-site wetlands, as depicted in Exhibit 7. ERA is coordinating with the US Army Corps of Engineers to obtain a permit for minimal wetland impacts associated with installation of a boardwalk as part of this project. Additional exhibits are provided to include depictions of the site location, aerial imagery, soils, and USGS topography. It is noted that surveyed topography is provided in the plan set in areas where development is proposed, and that the project study area shown in these exhibits broadly depicts the location of the project and does not represent the disturbance area depicted in the provided plan set.

Existing site conditions are shown in Sheet L100 of the provided plan set.

Proposed Site Description

The proposed project includes expansion and upgrade of the existing parking lot with an additional entrance along Eldamain Road, installation of new asphalt and crushed limestone walking paths, installation of a boardwalk, and installation of a nature center facility on a concrete pad. Proposed site conditions are shown in the provided plan set.

Proposed Drainage Features

Proposed drainage features include stormwater culverts installed under the new parking lot entrance at the northeast corner of the project area and under the portion of trail that crosses the roadside ditch at the northwest corner of Eldamain Road and River Road. ERA obtained Kendall County LIDAR data to delineate the tributary areas of the proposed culverts. A depiction of the delineated tributary areas is provided as Exhibit 8 of this submittal. The existing tributary area of the culvert location at the new parking lot entrance was determined to be 0.145 acre. ERA determined that a 12-inch RCP culvert would provide adequate flow capacity for this small area. It is noted that geometry and grading of the existing parking lot entrance will remain the same, and there is no existing or proposed stormwater conveyance proposed below this entrance. The existing tributary area of the culvert at the corner of River Road and Eldamain Road was determined to be 1.067 acres. ERA conservatively recommended a 21-inch RCP culvert to ensure that adequate flow capacity would be provided in the roadside ditch.

Although not required by the Kendall County Stormwater Management Ordinance, the proposed nature center facility is designed with rain gardens equipped with 4” mitered drain outlets to facilitate stormwater drainage. Rain garden locations are shown in C302 and associated design details are shown in L500 of the provided plan set.

The Kendall County Forest Preserve District will be responsible for maintenance responsibilities associated with all proposed drainage features, including regular inspection of the proposed RCP culverts and any associated repairs.

Development Areas and Detention Variance Request

The total development area of the project is approximately 71,125 sf (1.63-ac). The cumulative impervious improvement area of the project is approximately 36,850 sf (0.85-ac). In accordance with the Kendall County Stormwater Management Ordinance, since the development area is less than 5 acres, the % Impervious to Unit Area Detention nomograph depicted in Table 203 of the Ordinance may be used to determine the runoff storage volume requirement. Approximately 52% of the development area is impervious, therefore, 0.3 acre-ft of storage per acre of detention basin tributary area would be required. Assuming that the entire development area (1.63-ac) would be managed by the detention basin, approximately 0.49 ac-ft of storage volume would be required.

The Kendall County Forest Preserve District is requesting a variance from the detention requirement of the Kendall County Stormwater Management Ordinance for this project. Linear improvements such as impervious trails and walkways do not significantly impact site runoff rates, and providing detention for linear improvements is difficult and costly. For these reasons, the surrounding collar counties have specified exceptions to the detention requirements of their stormwater ordinances for impervious paths and trails developed in open space. In this particular case, asphalt and crushed limestone paths account for more than half of the proposed impervious development area. Other proposed impervious facilities, including the parking lot, entrances, and nature center account for approximately 16,920 sf of impervious area, which is less than the 32,000-sf impervious area threshold for site runoff storage requirements in the Kendall County Stormwater Management Ordinance. Additionally, the intent of this project is to improve and provide community access to the Subat Forest Preserve without resulting in unnecessary disturbance of on-site prairie and wetland areas. Due to the location of on-site wetlands, it is likely that at least two detention basins would be necessary to manage stormwater runoff from northern and southern project areas, resulting in additional on-site disturbance.

Soil Erosion and Sediment Control

The stormwater pollution prevention plan provided as L101 of the plan set describes the erosion control measure that will be implemented prior to the start of construction. Silt fencing is provided at downstream edges of the project. A temporary concrete washout location is proposed southwest of the facility parking lot. Excavated soils that are not repurposed as backfill material will be kept on-site and graded to maintain the existing site drainage direction, with silt fencing installed at the downstream edge of the stockpile area. All disturbed areas will be stabilized with topsoil, seed, and erosion control blanket in accordance with the IEPA General NPDES Permit for Construction Activities.

Conclusion

ERA looks forward to the County's review of this stormwater management permit application submittal for the renovation of Subat Nature Center. Please contact me with any questions or concerns at 630 393-3060 or jmayer@eraconsultants.com.

Respectfully submitted,
Engineering Resource Associates, Inc.

[redacted]

John F. Mayer, PE, CFM
Project Manager

Attachment 1 – Stormwater Management Permit Application Form
Attachment 2 – Exhibits
Attachment 3 – Plan Set

STORMWATER MANAGEMENT PERMIT

PERMIT APPLICATION #_____

Conformance with all Federal, State, and County Regulations is required. Applicants are encouraged to the Countywide Stormwater Management Ordinance and consider a pre-application meeting with Department staff prior to submittal. See attached highlights of regulations.

Property: Name Kendall County Forest Preserve District

Owner Address 110 W. Madison Street, Yorkville, IL 60560

Phone 630-553-4025

Agent: Name Engineering Resource Associates, Inc.

Address 3s701 W Avenue, Suite 150, Warrenville, IL 60555

Phone 630-393-3060

Site: Address or Location Intersection of Eldamain Road and River Road, Plano, IL 60545

Tax Parcel # 01-25-400-009, 01-36-200-022, and 01-36-200-025

Zoning/Land Use/Acres A1 Agricultural / Forest Preserve / 67.27 acres (1.63-ac disturbance)

Proposed Development:

The proposed development will upgrade facilities and walking paths at Subat Forest Preserve. Please see the description of the proposed development in the attached permit application memo.

Attachments: Plat_____ Construction Plans X

Soils_____ Landscaping_____

Grading X Phasing_____

Other_____

Fees $_____ Processing Fee ($50.00)

$_____ Engineering Review Deposit ($2,500.00 *or* 2% of estimated cost of the proposed improvements, whichever is greater. A $3,500.00 Construction Inspection Services Fee and General Consultation Fee Might Be Required as the Project Progresses)

TOTAL $ _____ One check is acceptable made out to the Kendall County Treasurer

Staff will contact Applicant regarding schedule and reviews.

I hereby certify that the information on this application, on the documents attached, and on other submittals made during the review process is true and correct; that I am authorized to file this application; and that I agree to conform to all requirements set forth by the County and all conditions of the County Stormwater Management Ordinance. I understand that by signing this form, that the property in question may be visited by County Staff and County Engineers throughout the permit and construction process. I also understand that I am responsible for all costs associated with this application. The applicant attests that they are free of debt or current on all debts owed to Kendall County as of the application date.

Owner's Signature (Including Middle Initial) [redacted] Date 05/07/2024

Exec. Director - KCFPD

Agent's Signature (Including Middle Initial)_____ Date_____

Kendall County Planning, Building, & Zoning Department
111 West Fox Street, Room 203
Yorkville, Illinois 60560
Phone: (630) 553-4139, Fax (630) 553-4179
www.kendallcountyil.gov

DEPARTMENT OF PLANNING, BUILDING & ZONING
111 West Fox Street • Yorkville, IL • 60560
(630) 553-4141 Fax (630) 553-4179

ENGINEERING CONSULTANT FEES

I, _____ understand that Kendall County uses the services of a
Applicant Name

consultant for engineering reviews and inspections and that I will be responsible for payment of services on _____ project. I authorize the consulting
Project Name

services to proceed.

☐ IF THIS IS ***NOT*** PART OF A BUILDING PERMIT APPLICATION, PLEASE CHECK THE BOX AND COMPLETE THIS SECTION:

I hereby submit a deposit of _____ payable to the **Kendall County Treasurer**
$ Amount

to be used by Kendall County to reimburse consultant for charges invoiced for work done in the review, approval and inspection of the proposed improvements.

I understand that if the deposit is depleted that I may be required to replenish the deposit to have work proceed.

I further understand that Kendall County will not issue a Building Permit or a Certificate of Occupancy as the case may be until I provide payment or proof of payment for the engineering services.

Signature of Applicant: [redacted] Date: 05/07/2024

Exec. Advisor. KCFPD

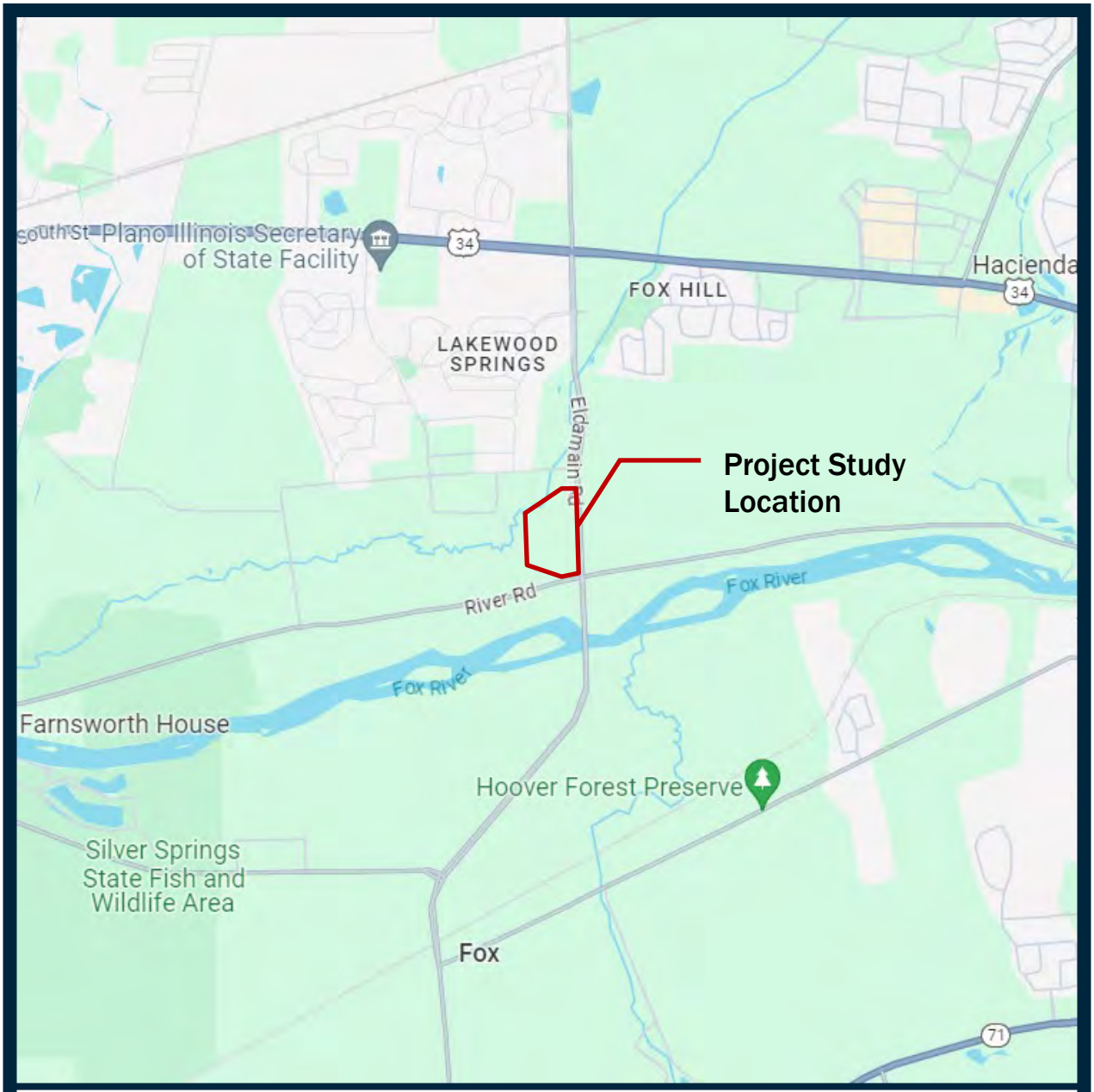

Exhibit 1
Location Map
Lat/Long: 41.646062°, -88.489773°

Project Study Location

NORTH

Client:	Upland Design
Project Name:	Subat Nature Preserve
ERA Project #:	W23229.00
Source:	Google Maps

Not to Scale

Engineering Resource Associates, Inc.
3S701 West Avenue, Suite 150
Warrenville, IL 60555
Phone: (630) 393-3060 FAX: (630) 393-2152

Warrenville | Chicago | Champaign
www.eraconsultants.com

Exhibit 2
National Wetland Inventory Map
Lat/Long: 41.646062°, -88.489773°

Project Study Location

NORTH

Client:	Upland Design
Project Name:	Subat Nature Preserve
ERA Project #:	W23229.00
Source:	USFWS NWI Mapper

Not to Scale

Engineering Resource Associates, Inc.
3S701 West Avenue, Suite 150
Warrenville, IL 60555
Phone: (630) 393-3060 FAX: (630) 393-2152

Warrenville | Chicago | Champaign
www.eraconsultants.com

Exhibit 3
Aerial Photograph
Lat/Long: 41.646062°, -88.489773°

Project Study Location

NORTH

Client:	Upland Design
Project Name:	Subat Nature Preserve
ERA Project #:	W23229.00
Source:	Google Earth

Not to Scale

Engineering Resource Associates, Inc.
3S701 West Avenue, Suite 150
Warrenville, IL 60555
Phone: (630) 393-3060 FAX: (630) 393-2152

Warrenville | Chicago | Champaign
www.eraconsultants.com

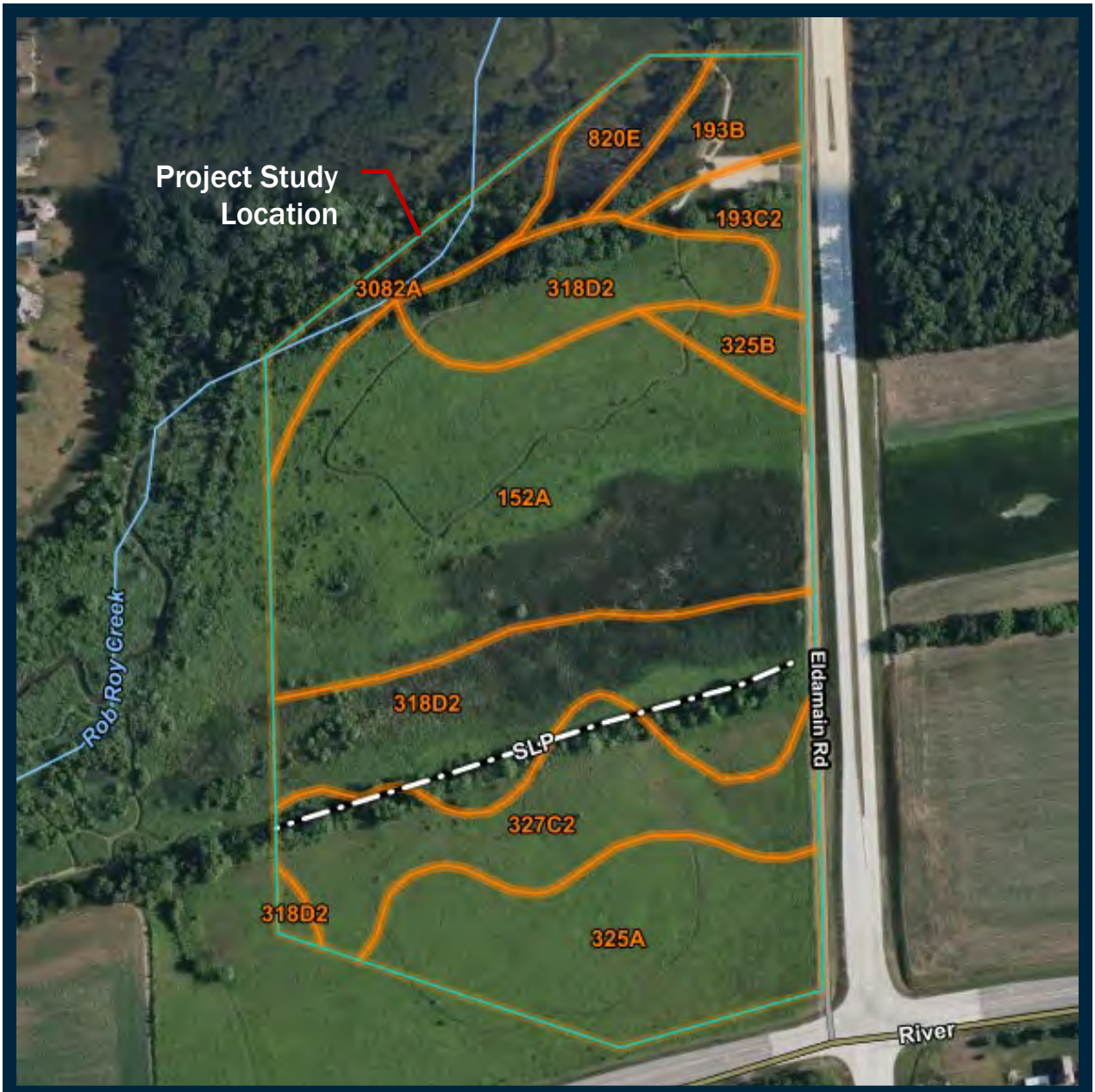

Exhibit 4.1
NRCS Soils Map
Lat/Long: 41.646062°, -88.489773°

Project Study Location

NORTH

Client:	Upland Design
Project Name:	Subat Nature Preserve
ERA Project #:	W23229.00
Source:	USDA Web Soil Survey

Not to Scale

Engineering Resource Associates, Inc.
3S701 West Avenue, Suite 150
Warrenville, IL 60555
Phone: (630) 393-3060 FAX: (630) 393-2152

Warrenville | Chicago | Champaign
www.eraconsultants.com

Map Unit Legend

Map Unit Symbol	Map Unit Name	Acres in AOI	Percent of AOI
152A	Drummer silty clay loam, 0 to 2 percent slopes	12.5	33.4%
193B	Mayville silt loam, 2 to 5 percent slopes	1.4	3.7%
193C2	Mayville silt loam, 5 to 10 percent slopes, eroded	1.0	2.8%
318D2	Lorenzo loam, 6 to 12 percent slopes, eroded	8.6	23.1%
325A	Dresden silt loam, 0 to 2 percent slopes	5.5	14.7%
325B	Dresden silt loam, 2 to 4 percent slopes	0.8	2.1%
327C2	Fox silt loam, 4 to 6 percent slopes, eroded	4.8	12.9%
820E	Hennepin-Casco complex, 12 to 30 percent slopes	1.1	3.0%
3082A	Millington silt loam, 0 to 2 percent slopes, frequently flooded	1.6	4.3%
Totals for Area of Interest		**37.3**	**100.0%**

Exhibit 4.2
NRCS Soils Map
Lat/Long: 41.646062°, -88.489773°

Project Study Location

NORTH

Not to Scale

Client: Upland Design
Project Name: Subat Nature Preserve
ERA Project #: W23229.00
Source: USDA Web Soil Survey

ENGINEERING RESOURCE ASSOCIATES
Engineering Resource Associates, Inc.
3S701 West Avenue, Suite 150
Warrenville, IL 60555
Phone: (630) 393-3060 FAX: (630) 393-2152

Warrenville | Chicago | Champaign
www.eraconsultants.com

Exhibit 5

FEMA Flood Insurance Rate Map

Lat/Long: 41.646062°, -88.489773°

Project Study Location

NORTH

Client:	Upland Design
Project Name:	Subat Nature Preserve
ERA Project #:	W23229.00
Source:	FEMA FIRM Viewer

Not to Scale

Engineering Resource Associates, Inc.
3S701 West Avenue, Suite 150
Warrenville, IL 60555
Phone: (630) 393-3060 FAX: (630) 393-2152

Warrenville | Chicago | Champaign
www.eraconsultants.com

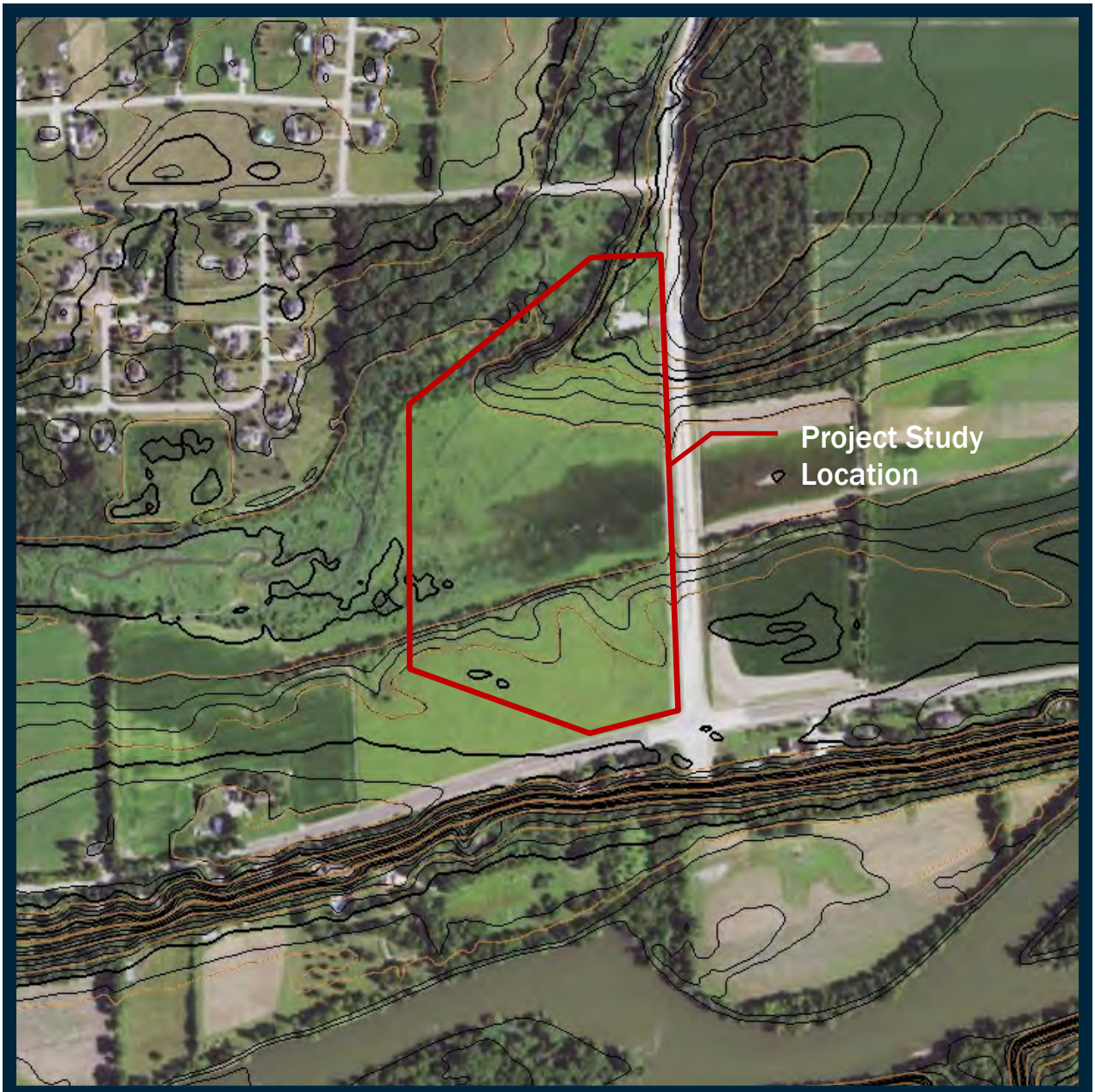

Exhibit 6
USGS Topographic Map
Lat/Long: 41.646062°, -88.489773°

Project Study Location

NORTH

Client:	Upland Design
Project Name:	Subat Nature Preserve
ERA Project #:	W23229.00
Source:	USGS National Map

Not to Scale

Engineering Resource Associates, Inc.
3S701 West Avenue, Suite 150
Warrenville, IL 60555
Phone: (630) 393-3060 FAX: (630) 393-2152

Warrenville | Chicago | Champaign
www.eraconsultants.com

Exhibit 7

Approximate Wetland Boundary

Lat/Long: 41.646062°, -88.489773°

- Approximate Wetland Boundary
- Approximate Offsite Wetlands Boundary
- Project Study Location
- Data Point

NORTH

Not to Scale

Client:	Upland Design
Project Name:	Subat Nature Preserve
ERA Project #:	W23229.00
Source:	ESRI

ENGINEERING RESOURCE ASSOCIATES

Engineering Resource Associates, Inc.
3S701 West Avenue, Suite 150
Warrenville, IL 60555
Phone: (630) 393-3060 FAX: (630) 393-2152

Warrenville | Chicago | Champaign
www.eraconsultants.com

BASIN 2 (0.145 ACRES)

BASIN 1 (1.067 ACRES)

REVISIONS:					
DATE	BY	DESCRIPTION	DATE	BY	DESCRIPTION

DRAWING BY: CF
CHECKED BY: TF
APPROVED BY: SG

ENGINEERING RESOURCE ASSOCIATES
3S701 WEST AVENUE, SUITE 150
WARRENVILLE, ILLINOIS 60555
PHONE (630) 393-3060
FAX (630) 393-2152

10 S. RIVERSIDE PLAZA, SUITE 875
CHICAGO, ILLINOIS 60606
PHONE (312) 474-7841
FAX (312) 474-6099

2416 GALEN DRIVE
CHAMPAIGN, ILLINOIS 61821
PHONE (217) 351-6268
FAX (217) 355-1902

CLIENT: UPLAND DESIGN

TITLE: EXISTING BASINS
SUBAT NATURE PRESERVE

SCALE: 1 IN = 100 FT
DATE: 5/2/2024
PROJECT: W23229.00
SHEET: 1 OF 1

May 14, 2024

Kendall County Department of Planning, Building, & Zoning
111 West Fox Street
Yorkville, Illinois, 60560

SUBJECT: **Subat Nature Center**
Kendall County Forest Preserve District
ERA Project #W23229.00
Comments Received May 8, 2024

ERA submits the following responses to the stormwater management permit application comments received via email on May 8, 2024.

1. Comment: *Pursuant to Section 901.4 of the Kendall County Stormwater Management Ordinance, please submit the following materials:*
    a. *The common address (if one exists) and legal description(s) of the property.*
    b. *The names and addresses of all property owners within 250 feet (PBZ can provide these, but please confirm that the 3 parcel numbers listed are correct).*
    c. *The specific provision from which a variance is sought (i.e. the section of the Stormwater Management Ordinance that would be varied).*
    d. *A statement that the variance requested is the minimum necessary to permit development.*
    e. *Please submit statements explaining how the variance satisfies the standards contained in Section 904.1 of the Kendall County Stormwater Management Ordinance.*

    Response:
    a. The common address of the forest preserve entrance and parking lot is 4845 Eldamain Road, Plano, IL 60545. A land title survey of the three parcels encompassing the project area is provided as an attachment to this response. Legal descriptions are included in the land title survey document.
    b. A list of names and addresses of all property owners within 250 feet is provided as Attachment 2 (3 pages) to this response.
    c. The applicant seeks a variance from the site runoff storage requirements of Section 203 of the Kendall County Stormwater Management Ordinance.
    d. The variance requested is the minimum necessary to permit the proposed development, as described further in the response to Comment 1.e., below.
    e. The following statements are submitted to address the standards contained in Section 904.1 of the Kendall County Stormwater Management Ordinance (Ordinance):

    The project has an impervious area of 36,850 sf. Under current project conditions, the Ordinance requires detention for developments resulting in an impervious area of greater than 32,000 sf. The trail section of the project constitutes 19,930 sf of impervious area or approximately 54% of the total impervious area of the project. The Kendall County Forest Preserve District requests a variance that allows exclusion of the impervious trail sections of the project in the calculation of total impervious improvements, as described below, resulting in no stormwater detention requirement for the project. The Kendall County Forest Preserve District requests a variance from site runoff storage requirements to avoid unnecessary disturbance of restored prairie habitats and native trees that reside within Subat Forest Preserve, as described below.

    The variance is not requested solely for the purpose of reducing site runoff storage requirements [904.1(d)]. The variance would preserve valuable environmental and biological resources, including restored prairie habitat, native trees, and existing wetlands [904.1(f)]. The intent of this project is to improve and provide community access to the Subat Forest Preserve without resulting in unnecessary disturbance of valuable on-site natural resources.

ERA looks forward to the County's review of these comment responses. Please contact me with any questions or concerns at 630 393-3060 or jmayer@eraconsultants.com.

Respectfully submitted,
Engineering Resource Associates, Inc.

[redacted]
John F. Mayer, PE, CFM
Project Manager

Attachment 1 – ALTA/NSPS Land Title Survey
Attachment 2 – Properties Within 250' of the Project Area (3 pages)

ALTA/NSPS LAND TITLE SURVEY

SOUTHERLY PARCEL
THAT PART OF THE NORTHEAST QUARTER OF SECTION 36, TOWNSHIP 37 NORTH, RANGE 6 EAST OF THE THIRD PRINCIPAL MERIDIAN, BEING DESCRIBED AS FOLLOWS: COMMENCING AT THE NORTHEAST CORNER OF SAID SECTION 36; THENCE SOUTH 00 DEGREES 00 MINUTES 19 SECONDS WEST ALONG THE EAST LINE OF SAID QUARTER SECTION, 699.00 FEET FOR THE POINT OF BEGINNING; THENCE NORTH 89 DEGREES 49 MINUTES 17 SECONDS WEST, 1279.78 FEET; THENCE SOUTH 00 DEGREES 37 MINUTES 43 SECONDS EAST, 610.73 FEET TO THE CENTERLINE OF RIVER ROAD; THENCE NORTH 75 DEGREES 28 MINUTES 49 SECONDS EAST ALONG SAID CENTERLINE, 1315.05 FEET TO SAID EAST LINE OF SECTION 36; THENCE NORTH 00 DEGREES 00 MINUTES 19 SECONDS EAST ALONG SAID EAST LINE, 277.00 FEET TO THE POINT OF BEGINNING ALL IN THE TOWNSHIP OF LITTLE ROCK, KENDALL COUNTY, ILLINOIS.

NORTHERLY PARCEL
THAT PART OF THE SOUTHEAST QUARTER OF SECTION 25 AND PART OF THE NORTHEAST QUARTER OF SECTION 36, TOWNSHIP 37 NORTH, RANGE 6 EAST OF THE THIRD PRINCIPAL MERIDIAN BY BEING DESCRIBED BY BEGINNING AT THE SOUTHEAST CORNER OF SAID SECTION 25; THENCE NORTH 00 DEGREES 00 MINUTES 39.5 SECONDS WEST ALONG THE EAST LINE OF SAID QUARTER SECTION, 1212.83 FEET TO THE CENTERLINE OF SCHAEFER ROAD; THENCE SOUTH 88 DEGREES 03 MINUTES 05 SECONDS WEST ALONG SAID CENTERLINE, 1285.48 FEET TO THE WEST LINE OF SUB LOT 13 OF SAID SECTION 25 AS SHOWN ON PAGE 36 OF PLAT BOOK 4; THENCE SOUTH 00 DEGREES 02 MINUTES 47 SECONDS WEST ALONG SAID WEST LINE, 1301.73 FEET MORE OR LESS TO A POINT LYING 136.62 FEET SOUTH OF THE NORTH LINE OF SAID SECTION 36, SAID POINT BEING THE SOUTHEAST CORNER OF SUB LOT 2 OF SAID SECTION 36 AS SHOWN ON PAGE 36 OF PLAT BOOK 4; THENCE SOUTH 00 DEGREES 37 MINUTES 43 SECONDS EAST PARALLEL WITH THE EAST LINE OF SAID SUB LOT 3 OF SAID SECTION 36, 562.50 FEET; THENCE SOUTH 89 DEGREES 49 MINUTES 17 SECONDS EAST, 1279.78 FEET TO A PONT ON THE EAST LINE OF SAID SECTION 36; THENCE NORTH 00 DEGREES 00 MINUTES 19 SECONDS EAST ALONG SAID EAST LINE, 699.00 FEET TO THE POINT OF BEGINNING IN THE TOWNSHIP OF LITTLE ROCK, KENDALL COUNTY, ILLINOIS.

SCHAEFER ROAD DEDICATION:
THAT PART OF THE SOUTHEAST QUARTER OF SECTION 25, TOWNSHIP 37 NORTH, RANGE 6 EAST OF THE THIRD PRINCIPAL MERIDIAN IN KENDALL COUNTY, ILLINOIS, DESCRIBED AS FOLLOWS: COMMENCING AT A FOUND IRON ROD AT THE SOUTHEAST CORNER OF SAID SECTION 25 PER MONUMENT RECORD 200900016871; THENCE ON AN ASSUMED BEARING OF NORTH 01 DEGREES 15 MINUTES 34 SECONDS WEST, 35.21 FEET ALONG THE EAST LINE OF SAID SOUTHEAST QUARTER TO THE SOUTHWEST CORNER OF SECTION 30, TOWNSHIP 37 NORTH, RANGE 7 EAST OF THE THIRD PRINCIPAL MERIDIAN; THENCE NORTH 00 DEGREES 51 MINUTES 12 SECONDS WEST, 1,177.55 FEET ALONG SAID EAST LINE TO THE CENTERLINE OF SCHAEFER ROAD AND THE POINT OF BEGINNING; THENCE SOUTH 86 DEGREES 57 MINUTES 58 SECONDS WEST, 395.52 FEET ALONG SAID CENTERLINE AS MONUMENTED; THENCE SOUTH 03 DEGREES 02 MINUTES 02 SECONDS EAST, 30.39 FEET; THENCE SOUTH 89 DEGREES 22 MINUTES 58 SECONDS EAST, 296.17 FEET; THENCE SOUTH 41 DEGREES 00 MINUTES 22 SECONDS EAST, 105.46 FEET TO THE WESTERLY LINE OF ELDAMAIN ROAD; THENCE NORTH 87 DEGREES 25 MINUTES 23 SECONDS EAST, 30.01 FEET TO SAID EAST LINE OF THE SOUTHEAST QUARTER; THENCE NORTH 00 DEGREES 51 MINUTES 12 SECONDS WEST, 132.72 FEET ALONG SAID EAST LINE TO THE POINT OF BEGINNING.

RIVER ROAD DEDICATION:
THAT PART OF THE NORTHEAST QUARTER OF SECTION 36, TOWNSHIP 37 NORTH, RANGE 6 EAST OF THE THIRD PRINCIPAL MERIDIAN IN KENDALL COUNTY, ILLINOIS, DESCRIBED AS FOLLOWS: COMMENCING AT A FOUND IRON ROD AT THE NORTHEAST CORNER OF SAID SECTION 36 PER MONUMENT RECORD 200900016871; THENCE ON AN ASSUMED BEARING OF SOUTH 01 DEGREES 04 MINUTES 12 SECONDS EAST, 976.63 FEET ALONG THE EAST LINE OF SAID NORTHEAST QUARTER TO THE CENTERLINE OF RIVER ROAD AND TO THE POINT OF BEGINNING; THENCE SOUTH 74 DEGREES 24 MINUTES 30 SECONDS WEST, 1314.98 FEET (1,315.05 FEET) ALONG SAID CENTERLINE AS MONUMENTED; THENCE NORTH 01 DEGREES 45 MINUTES 49 SECONDS WEST, 51.33 FEET ALONG THE GRANTOR'S WESTERLY PROPERTY LINE; THENCE NORTH 73 DEGREES 14 MINUTES 27 SECONDS EAST, 105.84 FEET; THENCE NORTH 65 DEGREES 32 MINUTES 27 SECONDS EAST, 105.24 FEET; THENCE NORTH 72 DEGREES 15 MINUTES 44 SECONDS EAST, 295.68 FEET; THENCE NORTH 73 DEGREES 52 MINUTES 48 SECONDS EAST, 302.06 FEET; THENCE NORTH 75 DEGREES 43 MINUTES 45 SECONDS EAST, 242.54 FEET; THENCE NORTH 77 DEGREES 32 MINUTES 47 SECONDS EAST, 203.53 FEET; THENCE NORTH 38 DEGREES 43 MINUTES 34 SECONDS EAST, 57.87 FEET TO THE WESTERLY LINE OF ELDAMAIN ROAD; THENCE NORTH 88 DEGREES 55 MINUTES 48 SECONDS EAST, 27.45 FEET TO SAID EAST LINE OF THE NORTHEAST QUARTER; THENCE SOUTH 01 DEGREES 04 MINUTES 12 SECONDS EAST, 95.29 FEET ALONG SAID EAST LINE TO THE POINT OF BEGINNING.

GENERAL NOTES:

GENERAL NOTES REFERRING PROPERTY SURVEYED:

1) THE SURVEYOR HAS NOT RECEIVED A COPY OF TITLE INSURANCE COMPANY COMMITMENT.
2) DURING THE PROCESS OF COMPLETING THE SURVEY, WE HAVE NOT FOUND ANY EVIDENCE OF RECENT EARTH WORK OR BUILDING CONSTRUCTION OTHER THAN THE RECENT CONSTRUCTION OF ELDAMAIN ROAD.
3) DURING THE PROCESS OF COMPLETING THE SURVEY AND THE PLATTING, I BELIEVE WE HAVE SHOWN ALL EASEMENTS FOR INGRESS AND EGRESS ON AND OFF THE SURVEYED TRACT OF LAND. THE ONLY ALLOWING ACCESS TO THIS PROPERTY IS LOCATED AT THE ENTRANCE OF THE PARKING LOT FOR THE REST AREA AND TRAILS JUST SOUTH OF SCHAEFER ROAD. THE PAVED ACCESS LOCATION HAS BEEN LOCATED AND SHOWN ON THE ATTACHED DRAWING.
4) THE LEGAL DESCRIPTIONS HEREON SHOWN ARE THE SAME LEGAL DESCRIPTIONS PROVIDED BY THE KENDALL COUNTY FOREST PRESERVE BASED ON DEEDS OF RECORD.
5) THERE IS NO RECORD OF FLOOD ZONES ON THE DESCRIBED PROPERTY ACCORDING TO THE FLOOD INSURANCE RATE MAP AVAILABLE AND DESIGNATED AS 17093C0040G, EFFECTIVE DATE OF 02/04/2009.

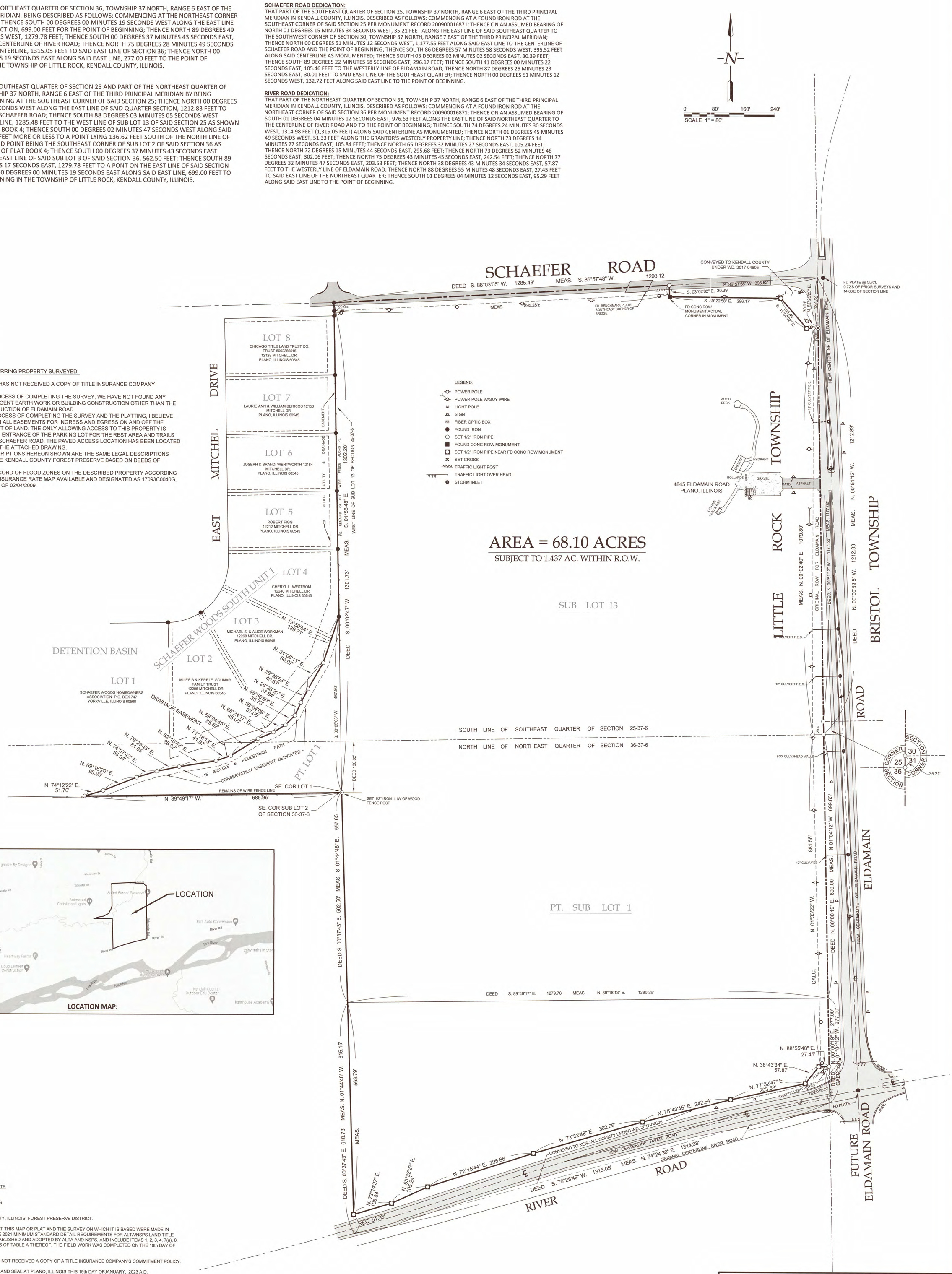

SURVEYOR'S CERTIFICATE

STATE OF ILLINOIS)
) SS
COUNTY OF KENDALL)

TO THE KENDALL COUNTY, ILLINOIS, FOREST PRESERVE DISTRICT.

THIS IS TO CERTIFY THAT THIS MAP OR PLAT AND THE SURVEY ON WHICH IT IS BASED WERE MADE IN ACCORDANCE WITH THE 2021 MINIMUM STANDARD DETAIL REQUIREMENTS FOR ALTA/NSPS LAND TITLE SURVEYS, JOINTLY ESTABLISHED AND ADOPTED BY ALTA AND NSPS, AND INCLUDE ITEMS 1, 2, 3, 4, 7(a), 8, 9, 11(VISIBLE), 13, AND 16 OF TABLE A THEREOF. THE FIELD WORK WAS COMPLETED ON THE 16th DAY OF JANUARY, 2023.

THE UNDERSIGNED HAS NOT RECEIVED A COPY OF A TITLE INSURANCE COMPANY'S COMMITMENT POLICY.

GIVEN UNDER MY HAND AND SEAL AT PLANO, ILLINOIS THIS 19th DAY OFJANUARY, 2023 A.D.

RONALD D. BAUER
ILLINOIS PROFESSIONAL LAND SURVEYOR #2352
REGISTRATION EXPIRES 11-30-2024

rbac
RB & ASSOCIATES CONSULTING, INC
4 W MAIN STREET
PLANO , IL 60545
(630) 552-7452
DESIGN FIRM # 184-004475
www.rb-associates.net

DWG # 2022-16357-068 D (ALTA)

May 30, 2024

Mr. Matt Asselmeier
Kendall County Planning, Building, & Zoning
111 West Fox Street
Yorkville, IL 60560-1498

Subject: Subat Nature Center- WBK Project 19-102.CB

Dear Mr. Asselmeier:

We have received and reviewed the following information for the subject project:

- Subat Nature Center Construction Documents prepared by Kluber, Upland and ERA dated April 11, 2024 ad received May 15, 2024.
- Kendall County Comment Response Letter prepared by ERA dated May 14, 2024 and received May 15, 2024.
- Drainage Exhibits prepared by ERA not dated and received May 15, 2024.
- Stormwater Permit Cover Letter, Stormwater Permit and variance support documentation prepared by ERA dated May 7, 2024 and received May 15, 2024.

We have no objection to the issuance of a stormwater variance for this project based on the information submitted. We find the conditions to approve the variance have been met and the project has unique conditions warranting approval of the variance.

Furthermore, we find the stormwater report construction documents submitted to be in general conformance with the County stormwater ordinance. The stormwater permit and construction documents are approved conditioned on resolution of the following comments.

1. Stormwater report – The boardwalk spans a significant drainageway with an upstream area that appears to exceed one square mile. While this is not floodplain please verify the boardwalk will not have an adverse impact on Eldamain Road. (See attached Streamstats Rreport)
2. We have no objections to access to Eldamain Road. Please verify Kendall County Highway Department concurrence.
3. L401 – Verify adequate cover over the 12 “RCP at the northernmost access to Eldamain, Revise as necessary.
4. L501 – The Boardwalk detail depicts the 100 year flood elevation. We concur with the concept presented in the detail. Provide the 100 flow elevation as well as the basis for determining that elevation at the boardwalk.

The applicant's design professionals are responsible for performing and checking all design computations, dimensions, details, and specifications in accordance with all applicable codes and regulations, and obtaining all permits necessary to complete this work. In no way does this review relieve applicant's design professionals of their duties to comply with the law and any applicable codes and regulations, nor does it relieve the Contractors in any way from their sole responsibility for the quality and workmanship of the work and for strict compliance with the permitted plans and specifications. If you have any questions or comments, please contact us at (630) 443-7755.

Sincerely,

[redacted]

Greg Chismark PE
WBK Engineering, LLC

StreamStats Report

Region ID: IL
Workspace ID: IL20240530210850045000
Clicked Point (Latitude, Longitude): 41.64580, -88.48983
Time: 2024-05-30 16:09:13 -0500

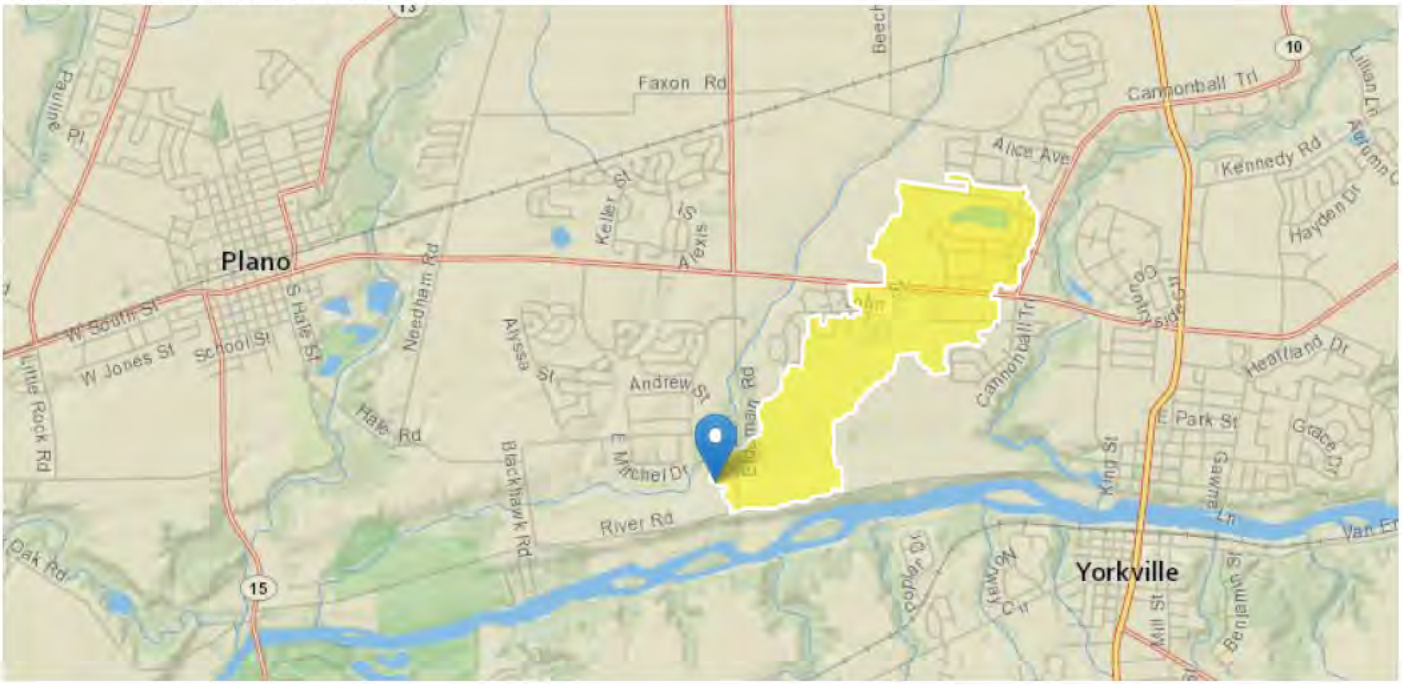

Collapse All

Basin Characteristics

Parameter Code	Parameter Description	Value	Unit
DRNAREA	Area that drains to a point on a stream	1.129	square miles
FLC16DVLMH	Fraction of drainage area that is in low to high developed land use classes 22-24 from NLCD 2016	0.3	decimal fraction
FSSURGDC78	Fraction of land area that is in very poorly drained and unknown likely water drainage classes 7 and 8 from SSURGO	0.003	decimal fraction
RELRELF	Basin relief divided by basin perimeter	5.54	feet per mi

Peak-Flow Statistics

Peak-Flow Statistics Parameters [IL Peakflow Region 2 ICT-23-014]

Parameter Code	Parameter Name	Value	Units	Min Limit	Max Limit
DRNAREA	Drainage Area	1.129	square miles	0.07031	1352
FLC16DVLMH	Frac_Lo_Med_Hi_Developed_from_NLCD2016	0.3	decimal fraction	0.002045	0.9692
FSSURGDC78	Fraction_SSURGO_Drainage_Classes_7_and_8	0.003	decimal fraction	0	0.2506
RELRELF	Relative Relief	5.54	feet per mi	0.8122	35.97

Peak-Flow Statistics Flow Report [IL Peakflow Region 2 ICT-23-014]

PIL: Lower 90% Prediction Interval, PIU: Upper 90% Prediction Interval, ASEp: Average Standard Error of Prediction, SE: Standard Error (other -- see report)

Statistic	Value	Unit	PIL	PIU	ASEp
50-percent AEP flood	77.4	ft^3/s	36.3	165	46.9
20-percent AEP flood	127	ft^3/s	58.7	275	47.9
10-percent AEP flood	164	ft^3/s	73.6	365	49.9
4-percent AEP flood	214	ft^3/s	92.1	497	52.8
2-percent AEP flood	253	ft^3/s	105	611	55.6
1-percent AEP flood	294	ft^3/s	118	734	58
0.5-percent AEP flood	335	ft^3/s	129	867	60.5
0.2-percent AEP flood	392	ft^3/s	146	1050	63.4

Peak-Flow Statistics Citations

Over, T.M., Marti, M.K., O'Shea, P.S., Sharpe, J.B.2023, Estimating peak-flow quantiles for selected annual exceedance probabilities in Illinois (Report No. FHWA-ICT-23-014). Illinois Center for Transportation. (https://doi.org/10.36501/0197-9191/23-019)

USGS Data Disclaimer: Unless otherwise stated, all data, metadata and related materials are considered to satisfy the quality standards relative to the purpose for which the data were collected. Although these data and associated metadata have been reviewed for accuracy and completeness and approved for release by the U.S. Geological Survey (USGS), no warranty expressed or implied is made regarding the display or utility of the data for other purposes, nor on all computer systems, nor shall the act of distribution constitute any such warranty.

USGS Software Disclaimer: This software has been approved for release by the U.S. Geological Survey (USGS). Although the software has been subjected to rigorous review, the USGS reserves the right to update the software as needed pursuant to further analysis and review. No warranty, expressed or implied, is made by the USGS or the U.S. Government as to the functionality of the software and related material nor shall the fact of release constitute any such warranty. Furthermore, the software is released on condition that neither the USGS nor the U.S. Government shall be held liable for any damages resulting from its authorized or unauthorized use.

USGS Product Names Disclaimer: Any use of trade, firm, or product names is for descriptive purposes only and does not imply endorsement by the U.S. Government.

Application Version: 4.20.1

StreamStats Services Version: 1.2.22

NSS Services Version: 2.2.1

State of Illinois
County of Kendall

Petition 24-15

ORDINANCE NUMBER 2024 - _____

GRANTING A VARIANCE TO THE KEDALL COUNTY STORMWATER MANAGEMENT ORDINANCE FOR THE PROPERTY IDENTIFIED BY PARCEL IDENTIFICATION NUMBERS 01-25-400-009, 01-36-200-022, AND 01-36-200-025, LOCATED AT 4845 ELDAMAIN ROAD IN LITTLE ROCK TOWNSHIP AND OWNED BY THE KENDALL COUNTY FOREST PRESERVE DISTRICT AND ALSO KNOWN AS THE SUBAT FOREST PRESERVE

WHEREAS, Section 900 of the Kendall County Stormwater Management Ordinance allows the County to grant variances from strict compliance with specific provisions of said Ordinance when such compliance is impossible or impracticable; and

WHEREAS, Section 906 of the Kendall County Stormwater Management Ordinance allows the County to impose conditions or limitations on the granting of a variance; and

WHEREAS, on or about May 17, 2024, the Kendall County Forest Preserve District submitted an application for a variance to Section 203 of the Kendall County Stormwater Management Ordinance regarding applicability of site runoff storage requirements; and

WHEREAS, the property impacted by the variance, hereinafter referred to as "the subject property" is identified by parcel identification numbers 01-25-400-009, 01-36-200-022, and 01-36-200-025 and is located at 4845 Eldamain Road in Little Rock Township, and is also known as the Subat Forest Preserve; the legal description of the property is attached hereto as Exhibit A; and

WHEREAS, the property is owned by the Kendall County Forest Preserve District and shall hereinafter be referred to as "the Petitioner"; and

WHEREAS, the Petitioner desires to create trail that will create new impervious surface totaling 19,930 square feet which they would like not included in the total development area of 36,850 square feet at the subject property; and

WHEREAS, the proposed development is for public use and the development of the forest preserve is planned, funded and facilitated as a public forest preserve by the Petitioner; and

WHEREAS, the Petitioner desires to protect avoid unnecessary disturbance of restored prairie habitats and native trees that reside within the subject property; and

WHEREAS, following due and proper notice by publication in the Kendall County Record on May 23, 2024, due and proper notification of the United City of Yorkville on May 20, 2024, due and proper notification to the City of Plano on May 20, 2024, due and proper notification to the Village of Sugar Grove on May 20, 2024, and due and proper notification to all of the property owners of record owning property within two hundred fifty feet of the subject property on May 20, 2024, the Kendall County Stormwater Management Oversight Committee conducted a public hearing on June 18, 2024, at 9:00 a.m., in the County Office Building at 111 W. Fox Street in Yorkville, at which the Petitioner's representatives presented evidence, testimony, and exhibits in support of the requested variance and **zero**

member of the public testified in favor of the request and **zero** members of the public testified in opposition to the request; and

WHEREAS, based on the evidence, testimony, and exhibits, the Kendall County Stormwater Management Oversight Committee has made their Findings of Fact and recommended **approval** of the variance with **conditions** as set forth in the Findings of Fact and Recommendation of the Kendall County Stormwater Management Oversight Committee, dated June 18, 2024, a true and correct copy of which is attached hereto as Exhibit B; and

WHEREAS, this variance shall be treated as a covenant running with the land and is binding on the successors, heirs, and assigns as to the same special use conducted on the property; and

WHEREAS, the Kendall County Board has considered the standards and finds that said petition is in conformance with the provisions and intent of the Kendall County Stormwater Management Ordinance.

NOW, THEREFORE, BE IT ORDAINED, BY THE COUNTY BOARD OF KENDALL COUNTY, ILLINOIS, as follows:

1. The Findings of Fact and Recommendation of the Kendall County Stormwater Management Oversight Committee attached hereto as Exhibit B is hereby accepted and the Findings of Fact set forth therein are hereby adopted as the Findings of Fact and Conclusions of this Kendall County Board.

2. The Kendall County Board hereby grants approval of the Petitioner's petition for a variance to Section 203 of the Kendall County Stormwater Management Ordinance regarding applicability of site runoff storage requirements subject to the following conditions:

   A. The site shall be developed substantially in accordance with the attached site plan, attached hereto as Exhibit C.

   B. The property owner shall follow all applicable Federal, State, and Local laws related to the development of this property as a forest preserve.

   C. Failure to comply with one or more of the above conditions or restrictions could result in the amendment or revocation of this variance

   D. If one or more of the above conditions is declared invalid by a court of competent jurisdiction, the remaining conditions shall remain valid.

IN WITNESS OF, this Ordinance has been enacted by majority vote of the Kendall County Board this 18th day of June, 2024.

Attest:

Debbie Gillette Kendall County Clerk	Matt Kellogg Kendall County Board Chairman

EXHIBIT A:
SUBAT FOREST PRESERVE LEGAL DESCRIPTION
KENDALL COUNTY FOREST PRESRVE DISTRICT, KENDALL COUNTY, ILLINOIS

SOUTHERLY PARCEL

THAT PART OF THE NORTHEAST QUARTER OF SECTION 36, TOWNSHIP 37 NORTH, RANGE 6 EAST OF THE THIRD PRINCIPAL MERIDIAN, BEING DESCRIBED AS FOLLOWS: COMMENCING AT THE NORTHEAST CORNER OF SAID SECTION 36; THENCE SOUTH 00 DEGREES 00 MINUTES 19 SECONDS WEST ALONG THE EAST LINE OF SAID QUARTER SECTION, 699.00 FEET FOR THE POINT OF BEGINNING; THENCE NORTH 89 DEGREES 49 MINUTES 17 SECONDS WEST, 1279.78 FEET; THENCE SOUTH 00 DEGREES 37 MINUTES 43 SECONDS EAST, 610.73 FEET TO THE CENTERLINE OF RIVER ROAD; THENCE NORTH 75 DEGREES 28 MINUTES 49 SECONDS EAST ALONG SAID CENTERLINE, 1315.05 FEET TO SAID EAST LINE OF SECTION 36; THENCE NORTH 00 DEGREES 00 MINUTES 19 SECONDS EAST ALONG SAID EAST LINE, 277.00 FEET TO THE POINT OF BEGINNING ALL IN THE TOWNSHIP OF LITTLE ROCK, KENDALL COUNTY, ILLINOIS.

NORTHERLY PARCEL

THAT PART OF THE SOUTHEAST QUARTER OF SECTION 25 AND PART OF THE NORTHEAST QUARTER OF SECTION 36, TOWNSHIP 37 NORTH, RANGE 6 EAST OF THE THIRD PRINCIPAL MERIDIAN BY BEING DESCRIBED BY BEGINNING AT THE SOUTHEAST CORNER OF SAID SECTION 25; THENCE NORTH 00 DEGREES 00 MINUTES 39.5 SECONDS WEST ALONG THE EAST LINE OF SAID QUARTER SECTION, 1212.83 FEET TO THE CENTERLINE OF SCHAEFER ROAD; THENCE SOUTH 88 DEGREES 03 MINUTES 05 SECONDS WEST ALONG SAID CENTERLINE, 1285.48 FEET TO THE WEST LINE OF SUB LOT 13 OF SAID SECTION 25 AS SHOWN ON PAGE 36 OF PLAT BOOK 4; THENCE SOUTH 00 DEGREES 02 MINUTES 47 SECONDS WEST ALONG SAID WEST LINE, 1301.73 FEET MORE OR LESS TO A POINT LYING 136.62 FEET SOUTH OF THE NORTH LINE OF SAID SECTION 36, SAID POINT BEING THE SOUTHEAST CORNER OF SUB LOT 2 OF SAID SECTION 36 AS SHOWN ON PAGE 36 OF PLAT BOOK 4; THENCE SOUTH 00 DEGREES 37 MINUTES 43 SECONDS EAST PARALLEL WITH THE EAST LINE OF SAID SUB LOT 3 OF SAID SECTION 36, 562.50 FEET; THENCE SOUTH 89 DEGREES 49 MINUTES 17 SECONDS EAST, 1279.78 FEET TO A PONT ON THE EAST LINE OF SAID SECTION 36; THENCE NORTH 00 DEGREES 00 MINUTES 19 SECONDS EAST ALONG SAID EAST LINE, 699.00 FEET TO THE POINT OF BEGINNING IN THE TOWNSHIP OF LITTLE ROCK, KENDALL COUNTY, ILLINOIS.

Exhibit B

The Kendall Stormwater Management Planning Committee approved the following Findings of Fact and Recommendation at their meeting on June 18, 2024, by a vote of ten (10) in favor and zero (0) in opposition.

FINDINGS OF FACT

The variance will not increase the probability of flood damage or create an additional threat to the public health, safety or welfare.

The variance requested is the minimum relief necessary to accomplish the objectives of the development without compromising the objectives of Section 102 of the Kendall Stormwater Management Ordinance.

The variance will not result in a reduction of water quality benefits as compared to compliance with ordinance requirements.

The variance is not requested solely for the purpose of reducing site runoff storage requirements.

The variance shall not cause conveyance of stormwater from the project to increase peak discharges beyond design capacity of existing offsite conveyance facilities for any storm event from the 2-year to the 100-year recurrence frequency.

RECOMMENDATION

Approval with the following conditions and restrictions:

1. The site shall be developed substantially in accordance with the submitted site plan.
2. The property owner shall follow all applicable Federal, State, and Local laws related to the development of this property as a forest preserve.
3. Failure to comply with one or more of the above conditions or restrictions could result in the amendment or revocation of this variance.
4. If one or more of the above conditions is declared invalid by a court of competent jurisdiction, the remaining conditions shall remain valid.

Copyright © 2024 KLUBER, INC.

GENERAL NOTES

ALL CONSTRUCTION SHALL BE IN ACCORDANCE WITH THE REQUIREMENTS SET FORTH BY IBC 2018 EDITION AND SHALL CONFORM TO ALL OTHER APPLICABLE MUNICIPAL, STATE, AND FEDERAL REGULATIONS INCLUDING THE ILLINOIS ACCESSIBILITY CODE (2018) AND THE AMERICANS WITH DISABILITIES ACT.

A. GENERAL NOTES

1. ALL CONTRACTORS ARE REQUIRED TO VISIT THE SITE AND BE KNOWLEDGEABLE REGARDING EXISTING CONDITIONS AND THEIR EFFECT ON THE PROPOSED WORK. CONTRACTORS SHALL VERIFY AND BE RESPONSIBLE FOR, ANY CONDITIONS REQUIRING MODIFICATION BEFORE PROCEEDING WITH THE PROJECT.
2. NOTIFY THE OWNER'S REPRESENTATIVE A MINIMUM OF 72 HOURS PRIOR TO THE INTERRUPTION OF ANY UTILITY.
3. PROTECT AND KEEP IN SERVICE ACTIVE UNDERGROUND UTILITIES, PIPES, OR CONDUITS, WHETHER INDICATED ON THE DRAWINGS OR NOT, UNLESS SPECIFICALLY CALLED FOR TO BE REMOVED, RELOCATED, OR DISCONNECTED AND ABANDONED.
4. CONTRACTORS AND SUBCONTRACTORS SHALL COORDINATE THEIR WORK WITH THAT OF OTHER TRADES.
5. NO WORK WILL BE PERMITTED TO BE INSTALLED WITHOUT RECEIPT AND SUBSEQUENT REVIEW OF FULL AND COMPLETE SUBMITTALS BY THE ARCHITECT/ENGINEER.
6. DO NOT SCALE DRAWINGS, DIMENSIONS INDICATED TAKE PRECEDENCE OVER SCALE.
7. VERIFY ALL DIMENSIONS AND ELEVATIONS IN THE FIELD. WHERE DISCREPANCIES ARE FOUND BETWEEN DIMENSIONS OR ELEVATIONS SHOWN AND ACTUAL FIELD CONDITIONS, NOTIFY ARCHITECT/ENGINEER.
8. WHERE CONFLICTS MAY EXIST BETWEEN THE REQUIREMENTS OF PORTIONS OF THE CONTRACT DOCUMENTS, THE GREATER QUANTITY, HIGHER QUALITY OR MORE STRINGENT REQUIREMENT SHALL GOVERN. THEREFORE, BY EXECUTING A CONTRACT FOR CONSTRUCTION, THE CONTRACTOR AGREES THAT, IF IT RAISED NO QUESTIONS REGARDING SUCH CONFLICTS DURING THE BIDDING PROCESS, AND IN THE ABSENCE OF A CLARIFYING ADDENDUM ISSUED DURING THE BIDDING PROCESS, IT HAS VOLUNTEERED TO COMPLY WITH THE MORE EXPENSIVE REQUIREMENT AS PART OF ITS BASE BID AND IS NOT ENTITLED TO ANY ADDITIONAL COMPENSATION TO RESOLVE THE CONFLICT.
9. THE CONTRACT DOCUMENTS REQUIRE THE CONTRACTOR TO FURNISH AND INSTALL COMPLETE PRODUCTS, SYSTEMS AND SERVICES. BY EXECUTING A CONTRACT FOR CONSTRUCTION, THE CONTRACTOR AGREES THAT THE DRAWINGS SET FORTH THE DESIGN INTENT AND, THEREFORE, MAY NOT EXPRESSLY DEPICT EVERY LENGTH, SEGMENT, PIECE, PART, COMPONENT OR UNIT OF A PRODUCT, SYSTEM OR SERVICE. THE CONTRACTOR FURTHER AGREES THAT, AS PART OF ITS BID, IT MUST FURNISH AND INSTALL EVERY LENGTH, SEGMENT, PIECE, PART, COMPONENT OR UNIT OF A PRODUCT, SYSTEM OR SERVICE AND, CONSEQUENTLY, THE CONTRACTOR IS NOT ENTITLED TO ANY ADDITIONAL COMPENSATION FOR ANY LENGTH, SEGMENT, PIECE, PART COMPONENT OR UNIT OF A PRODUCT, SYSTEM OR SERVICE BECAUSE IT IS NOT EXPRESSLY DEPICTED HEREIN.
10. THE CONTRACT DOCUMENTS REQUIRE THE CONTRACTOR TO INSTALL A CONTINUOUS AIR BARRIER THROUGHOUT THE BUILDING ENVELOPE, IN COMPLIANCE WITH THE 2018 INTERNATIONAL ENERGY CONSERVATION CODE (IECC), SECTION C402.5 – AIR LEAKAGE. CONTRACTOR AND ITS SUBCONTRACTORS AGREE TO BE JOINTLY AND SEPARATELY RESPONSIBLE FOR COORDINATING AND VERIFYING THAT ALL SOURCES OF AIR LEAKAGE IN THE BUILDING THERMAL ENVELOPE ARE CAULKED, GASKETED, WEATHER STRIPPED, OR OTHERWISE APPROPRIATELY SEALED AIR-TIGHT USING CODE- COMPLIANT ALTERNATIVES AS APPROPRIATE FOR EACH MATERIAL AND CONDITION/LOCATION. PROVIDE AIR BARRIER MATERIALS HAVING AN AIR PERMEABILITY NO GREATER THAN 0.004 cfm/ft^2 (L/sm^2) UNDER PRESSURE DIFFERENTIAL OF 0.3 INCHES WATER GAUGE (75 Pa) WHEN TESTED IN ACCORDANCE WITH ASTM E2178, AND COMPLY WITH IECC 2018 SECTION C402.5.1.2.1 – MATERIALS.

STANDARD ABBREVIATIONS

@	AT
A B	ANCHOR BOLT
ABR	ABRASIVE
ACP	ACOUSTICAL CEILING PANEL
ACT	ACOUSTICAL CEILING TILE
AFF	ABOVE FINISH FLOOR
AFG	ABOVE FINISH GRADE
ACOU	ACOUSTIC
ADD'N	ADDITION
ADD'L	ADDITIONAL
ADJ	ADJACENT OR ADJUSTABLE
AL	ALUMINUM
ALT	ALTERNATE
ANCHR	ANCHOR
AP	ACCESS PANEL
APPROX	APPROXIMATE
ASPH	ASPHALT
AUTO	AUTOMATIC
AVG	AVERAGE
BSMT	BASEMENT
B/	BOTTOM OF
BD	BOARD
BET	BETWEEN
BIT	BITUMINOUS
BLDG	BUILDING
BLKG	BLOCKING (WOOD)
BM	BEAM
B.M.	BENCH MARK
BRG	BEARING
BRKT	BRACKET
BRK	BRICK
BT STL PL	BENT STEEL PLATE
CJ	CONSTRUCTION OR CONTRACTION JOINT
CAB	CABINET
CEM PL-(1)	CEMENT PLASTER (TYPE)
CT PAV-(1)	CERAMIC PAVER TILE (TYPE)
CIP	CAST-IN-PLACE
CLG	CEILING
CLR	CLEAR
C.O.	CLEAN-OUT
CMU	CONCRETE MASONRY UNIT
COL	COLUMN
COMB	COMBINATION
COMP	COMPRESSIBLE OR COMPACTED
CONC	CONCRETE
CONC OPNG	CONCRETE OPENING
COND	CONDITION
CONT	CONTINUOUS
CONTR	CONTRACT(OR)
CPT-(1)	CARPET (TYPE)
CT-(1)	CERAMIC TILE (TYPE)
CTR	COUNTER
CTR SK	COUNTER SINK
CTRS	CENTER(S)
CUH	CABINET UNIT HEATER
CUV	CABINET UNIT VENTILATOR
DIA	DIAMETER
DIM	DIMENSION
DN	DOWN
DO	DOOR OPENING
DR	DOOR
DWGS	DRAWINGS
DTL	DETAIL
DWL'S	DOWELS
EA	EACH
EJ	EXPANSION JOINT
EL	ELEVATION
ELEC	ELECTRIC/ELECTRICAL
ELEC CONTR	ELECTRICAL CONTRACTOR
ELEV	ELEVATOR OR ELEVATION
EMBED	EMBEDMENT
EMER	EMERGENCY
EP	EPOXY
EQ	EQUAL
EW	EACH WAY
EWC	ELECTRIC WATER COOLER
EWH	ELECTRIC WATER HEATER
EXIST	EXISTING
EXP	EXPANSION
EXP CONST	EXPOSED CONSTRUCTION
FD	FLOOR DRAIN
FDN	FOUNDATION
FNDN	FOUNDATION
FE	FIRE EXTINGUISHER
FEC	FIRE EXTINGUISHER CABINET
FHC	FIRE HOSE CABINET
FIN	FINISH
FLR	FLOOR
FRT	FIRE RETARDANT TREATED
FUR CHN'L	FURRING CHANNEL
FTG	FOOTING
GA	GAUGE
GALV	GALVANIZED
GEN CONTR	GENERAL CONTRACTOR
GC	GENERAL CONTRACTOR
GL	GLASS
GYP BD-(1)	GYPSUM WALL BOARD (TYPE)
GYP PL-(1)	GYPSUM PLASTER (TYPE)
H	HIGH
HD	HEAVY DUTY OR HARD
HDNR	HARDENER
HD WD-(1)	HARD WOOD (TYPE)
HDWR	HARDWARE
HT	HEIGHT
HM	HOLLOW METAL
HP	HIGH POINT
HORIZ	HORIZONTAL
HTG	HEATING
HVAC	HEATING/VENTILATING/AIR CONDITIONING
IN	INCH
ID	INSIDE DIAMETER
INCL	INCLUDE/INCLUDING/INCLUDED
INSUL	INSULATION/INSULATING/INSULATED
JT	JOINT
KD	KNOCK DOWN
L	LONG
LAM	LAMINATE/LAMINATING/LAMINATED
LAV	LAVATORY
LH	LEFT HAND
LP	LOW POINT
LT WT	LIGHTWEIGHT
LL	LIVE LOAD
LLH	LONG LEG HORIZONTAL
LLV	LONG LEG VERTICAL
LVR	LOUVER
MO	MASONRY OPENING
MT	METAL THRESHOLD
MAS	MASONRY
MATL	MATERIAL
MAX	MAXIMUM
MB (16)	MARKERBOARD (LENGTH IN FEET)
MECH	MECHANICAL
MECH CONTR	MECHANICAL CONTRACTOR
MFR	MANUFACTURER
MIN	MINIMUM OR MINUTE(S)
MISC	MISCELLANEOUS
MSB	MOP SERVICE BASIN (SINK)
MT(D)	MOUNT(ED)
MTL	METAL
NIC	NOT IN CONTRACT
NOM	NOMINAL
NTS	NOT TO SCALE
NO	NUMBER
OA	OVERALL OR OUTSIDE AIR
OC	ON CENTER
OD	OUTSIDE DIAMETER
OF	OUTSIDE FACE OR OPPOSITE FACE
OPNG	OPENING
OPP	OPPOSITE OR OPPOSITE HAND
PSF	POUNDS PER SQUARE FOOT
PS	POUNDS PER SQUARE INCH
PT	PRESSURE TREATED OR PAINT
PTN	PARTITION
PVMT	PAVEMENT
PC	PIECE
PL	PLATE
PLAM	PLASTIC LAMINATE(D)
PL	PLASTER
PLB'G	PLUMBING
PLB'G CONTR	PLUMBING CONTRACTOR
PLYWD	PLYWOOD
PNT	PAINT
PO	PRECAST (CONCRETE) OPENING
PVC	POLYVINYL CHLORIDE
PL-(1)	GYPSUM PLASTER (TYPE)
R	RISER
R OR RAD	RADIUS
RD	ROOF DRAIN
RO	ROUGH OPENING
RF (1)	RUBBER FLOORING (TYPE)
RH	RIGHT HAND
REF	REFERENCE
REINF	REINFORCE/REINFORCING/REINFORCED
REQ'D	REQUIRED
RM	ROOM
SF	SQUARE FOOT
SI	SQUARE INCH
SK	SINK
SS	STAINLESS STEEL
SSK	SERVICE SINK
SQ	SQUARE
SCHED	SCHEDULE
SEAL/HDNR	SEALER/HARDENER
SEC	SECTION
SHT	SHEET
SIM	SIMILAR
SOG	SLAB ON GRADE
SPEC(S)	SPECIFICATION(S)
SPC'G	SPACING
SPK'R	SPEAKER
STD	STANDARD
STD WT	STANDARD WEIGHT
STL	STEEL
STRUCT	STRUCTURE OR STRUCTURAL
SUSP	SUSPEND(ED)
SYM	SYMMETRICAL
T	TREAD
T&G	TONGUE AND GROOVE
T/BEAM	TOP OF
T/BEAM	TOP OF BEAM
T/C	TOP OF CURB
T/FNDN	TOP OF FOUNDATION
T/STL	TOP OF STEEL
T/WALL	TOP OF WALL
TB (4)	TACKBOARD (LENGTH IN FEET)
T/MAS	TOP OF MASONRY
TYP	TYPICAL
UD	(WINDOW) UNIT DIMENSION
UNO	UNLESS NOTED OTHERWISE
VBC	VINYL BASE COVED
VBS	VINYL BASE STRAIGHT
VCT	VINYL COMPOSITION TILE
VEN PL (1)	VENEER PLASTER (TYPE)
VERT	VERTICAL
W	WIDE OR WIDTH
W/	WITH
W/O	WITHOUT
WCG	WALL CORNER GUARD
WD	WOOD
WDW	WINDOW
WT	WEIGHT
WP	WATER PROOF
WWF	WELDED WIRE FABRIC
WSB	WALL SERVICE BASIN

THE MATERIALS, ABBREVIATIONS, AND DRAFTING SYMBOLS LEGEND ARE EACH AN ALL INCLUSIVE MASTER LIST USED BY THIS FIRM. THE INCLUSION OF THESE LEGENDS INTO THESE DOCUMENTS DOES NOT IMPLY THAT ALL THE SYMBOLS OR MATERIALS INCLUDED IN THESE LEGENDS ARE INCORPORATED INTO THIS PROJECT. ABBREVIATIONS MAY APPEAR WITH PERIODS OR OTHER PUNCTUATION SEPARATING CHARACTERS ON THE DRAWINGS; THE MEANING REMAINS THE SAME.

DRAFTING SYMBOLS AND MATERIALS LEGEND

DETAIL CALLOUT — DETAIL NUMBER 8 / DRAWING NUMBER A1224
EXTERIOR ELEVATION — ELEVATION NUMBER 23 / DRAWING NUMBER A719
INTERIOR ELEVATION — ELEVATION NUMBER 2, 3, 5, 6 / DRAWING NUMBER A916
SECTION REFERENCE — SECTION NUMBER 1 / DRAWING NUMBER A605
COLUMN NO. 26
REFERENCE LINE NO. 26
LOCATION ELEVATION T/1ST FLR. 100'-0"
ROOM NUMBER 204
DOOR NO. NEW 203.2
DOOR NO. EXISTING 203.1X
NOMINAL THICKNESS / CONSTRUCTION TYPE / SPECIAL CONDITION M8b
KEYNOTE IDENTIFICATION 7.531
WINDOW TYPE IDENTIFICATION X
TOILET ACCESSORY IDENTIFICATION A
SPOT ELEVATION T/1ST FLR. 100'-0"
FIRE-RATING — 1-HOUR; 2-HOUR
CONCRETE
BRICK MASONRY IN PLAN
CONCRETE MASONRY IN PLAN (RUNNING BOND)
CONCRETE MASONRY IN PLAN (STACK BOND)
STONE MASONRY IN PLAN
RAKED JOINT IN PLAN / CTRL./EXP. JOINT IN PLAN
BRICK MASONRY IN SECTION DETAIL
CONCRETE MASONRY IN SECTION DETAIL
STONE MASONRY IN SECTION DETAIL
STEEL IN SECTION DETAIL
DISCONTINUOUS ROUGH WOOD BLOCKING IN SECTION
CONTINUOUS ROUGH WOOD FRAMING/BLOCKING IN SECTION
FINISHED WOOD IN SECTION DETAIL
RIGID BOARD INSULATION
RIGID BOARD INSULATION (ROOFING)
BATT INSULATION
GYPSUM BOARD
ACOUSTICAL CEILING PANEL
BITUMINOUS CONCRETE (ASPHALT) PAVING IN SECTION
AGGREGATE BALLAST, FILL OR BACKFILL IN SECTION
UNDISTURBED EARTH
EARTH BACKFILL

KENDALL COUNTY FOREST PRESERVE DISTRICT

PROJECT — **SUBAT NATURE CENTER**
ELDAMAIN RD.
PLANO, IL 60545

OWNER — **KENDALL COUNTY FOREST PRESERVE**
110 W MADISON ST
YORKVILLE, IL 60560

ARCHITECT/ ENGINEER — **KLUBER ARCHITECTS + ENGINEERS**
41 W BENTON STREET
AURORA, ILLINOIS 60506
TEL (630) 406-1213
FAX (630) 406-9472
www.kluberinc.com

INDEX OF DRAWINGS

G100	COVER SHEET, GENERAL NOTES, SYMBOLS, & DRAWING INDEX
G201	ACCESSIBILITY REQUIREMENTS
L100	EXISTING CONDITONS & REMOVAL PLANS
L101	STORMWATER POLLUTION PREVENTION PLAN
L200	LAYOUT PLAN – OVERALL
L201	LAYOUT, DIMENSION, & GRADING PLAN – NORTH TRAIL
L202	LAYOUT, DIMENSION, & GRADING PLAN – SOUTH TRAIL
L203	LAYOUT PLAN – PARKING LOT ENLARGEMENT
L204	LAYOUT PLAN – NATURE CENTER ENLARGEMENT
L301	DIMENSION PLAN – PARKING LOT ENLARGEMENT
L302	DIMENSION PLAN – NATURE CENTER ENLARGEMENT
L401	GRADING PLAN – PARKING LOT ENLARGEMENT
L402	GRADING PLAN – NATURE CENTER ENLARGEMENT
L500	CONSTRUCTION DETAILS
L501	CONSTRUCTION DETAILS
A010	ARCHITECTURAL SITE PLAN
A310	ARCHITECTURAL FIRST FLOOR PLAN
A330	ROOF PLAN
A600	BUILDING SECTIONS
A700	EXTERIOR BUILDING ELEVATIONS
A701	EXTERIOR BUILDING ELEVATIONS
A800	DOOR, FRAME & HARDWARE SCHEDULES
A1200	SECTION DETAILS
S010	GENERAL NOTES CODE & LOADING, TESTING & INSPECTIONS
S310	FOUNDATION & SLAB PLAN, SECTIONS AND DETAILS
S311	GEOMETRIC SLAB PLAN & FOUNDATION SECTIONS AND DETAILS
S320	ROOF FRAMING PLANS, SECTIONS AND DETAILS
S800	SCHEDULES, SECTIONS & DETAILS

REQUIRED CODE COMPLIANCE INFORMATION

REQUIRED PLAN COVER SHEET
INFORMATION FOR REVIEW
UNDER 2018 INTERNATIONAL CODES,
STATE OF ILLINOIS ACCESSIBILITY CODE, AND
THE STATE OF ILLINOIS PLUMBING CODE
CODE REVIEW DATA

GENERAL STATEMENT OF OVERALL PROJECT SCOPE AND INTENT:
PROJECT CONSISTS OF AN OUTDOOR NATURE CENTER WITH TWO SMALL SHEDS AND NO HABITABLE INTERIOR SPACES.
THE PROJECT SHALL BE CONSIDERED USE GROUP U.

A. USE AND OCCUPANCY GROUP(S) CLASSIFICATION: U.
B. TYPE OF CONSTRUCTION: VB
C. SQUARE FOOTAGE OF BUILDING: 1,583 SF* INCLUDING UNDER CANOPY AND SHEDS.
ALLOWABLE SQUARE FOOTAGE: 5,500 SF.
D. OCCUPANT LOAD BASED ON INTERNATIONAL BUILDING CODE: 83 ASSEMBLY AND ACCESSORY STORAGE OCCUPANCY.
E. OCCUPANT LOAD BASED ON ILLINOIS PLUMBING CODE: NOT APPLICABLE.
F. DESIGNED LIVE LOADS: 20 PSF.
G. THE DESIGN PROFESSIONALS IN RESPONSIBLE CHARGE ARE IDENTIFIED IN THE SEALS AND CERTIFICATES AREA, BELOW.

APPLICABLE CODES

2018 INTERNATIONAL BUILDING CODE
2018 INTERNATIONAL MECHANICAL CODE
2018 INTERNATIONAL FUEL AND GAS CODE
2006 INTERNATIONAL FIRE CODE
2017 NATIONAL ELECTRICAL CODE
LOCAL AMENDMENTS TO THE ABOVE CODES

2014 ILLINOIS PLUMBING CODE
2021 ILLINOIS ENERGY CONSERVATION CODE
(2021 INTERNATIONAL ENERGY CONSERVATION CODE W/STATE AMENDMENTS)
2018 ILLINOIS ACCESSIBILITY CODE

SEALS & CERTIFICATIONS

I HAVE PREPARED, OR CAUSED TO BE PREPARED UNDER MY DIRECT SUPERVISION, THE ATTACHED PLANS AND SPECIFICATIONS AND STATE THAT TO THE BEST OF MY KNOWLEDGE AND BELIEF, AND TO THE EXTENT OF MY CONTRACTUAL OBLIGATION, THEY ARE IN COMPLIANCE WITH IBC 2018 EDITION, THE ENVIRONMENTAL BARRIERS ACT AND THE ILLINOIS ACCESSIBILITY CODE.

KLUBER, INC. ILLINOIS PROFESSIONAL DESIGN FIRM LICENSE #184-001284

ARCHITECT'S SEAL — LICENSED ARCHITECT, CHRISTOPHER J. HANSEN, STATE OF ILLINOIS
expires 11-30-20 24
[redacted]
signature
April 11, 2024
date
"G" SERIES, "A" SERIES

CIVIL ENGINEER'S SEAL — [redacted] JOHN F. MAYER, REGISTERED PROFESSIONAL ENGINEER OF, STATE OF ILLINOIS
Exp. 11/30/25
April 11, 2024
"G" SERIES, "L" SERIES

STRUCTURAL ENGINEER'S SEAL — LICENSED STRUCTURAL ENGINEER, JEFFREY M. BRUNS, STATE OF ILLINOIS
expires 11-30-20 24
signature
April 11, 2024
date
"G" SERIES, "S" SERIES

Kluber Architects + Engineers
Kluber, Inc.
Aurora, Illinois 60506
tel. 630.406.1213
Bloomington, Illinois 61704
tel. 309.430.0460
www.kluberinc.com

SUBAT NATURE CENTER
KENDALL COUNTY FOREST PRESERVE DISTRICT
4675 ELDAMAIN ROAD
PLANO, IL 60545

ISSUED	
04/10/24	OWNER REVIEW
04/11/24	BID DOCUMENTS

JOB NO.	23-429-1495
DRAWN	SKF
CHECKED	CJH
APPROVED	CJH

SHEET TITLE
COVER SHEET, GENERAL NOTES, SYMBOLS AND DRAWING INDEX

SHEET NUMBER
G100

NOTE: SCALES DEPICTED ON THIS DRAWING ARE NOT CORRECT UNLESS PLOTTED SHEET SIZE IS 30 X 42 INCHES.

Copyright © 2024 KLUBER, INC.

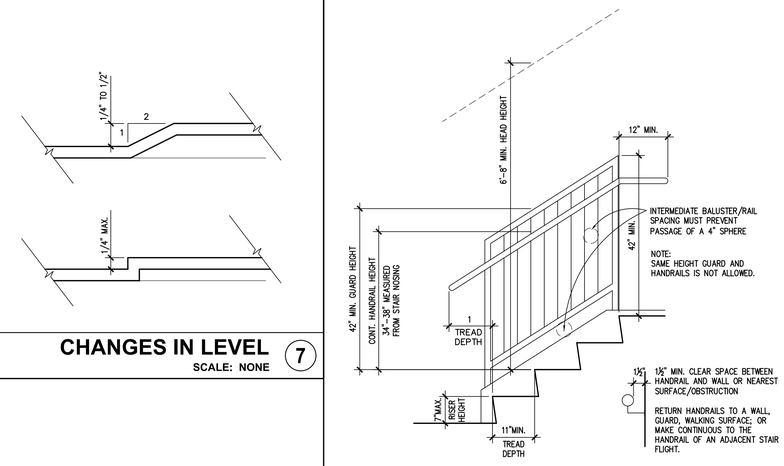

STAIRS AND GUARDS (3)

SCALE: NONE

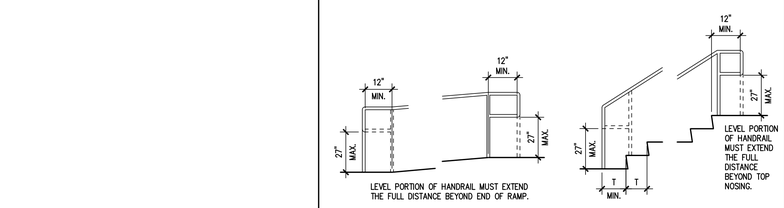

HANDRAIL EXTENSIONS (2)

SCALE: NONE

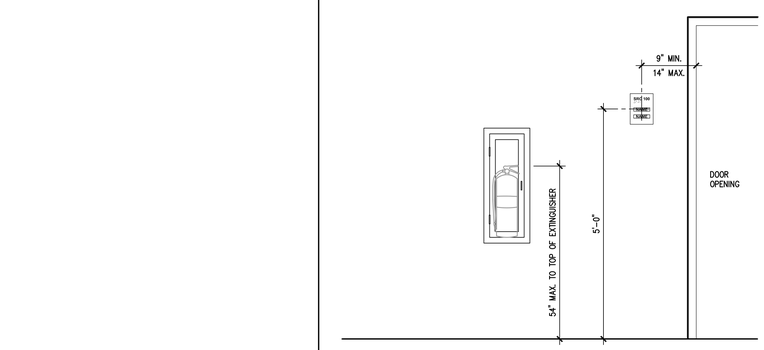

ROOM SIGNS, FIRE EXTINGUISHERS (1)

SCALE: NONE

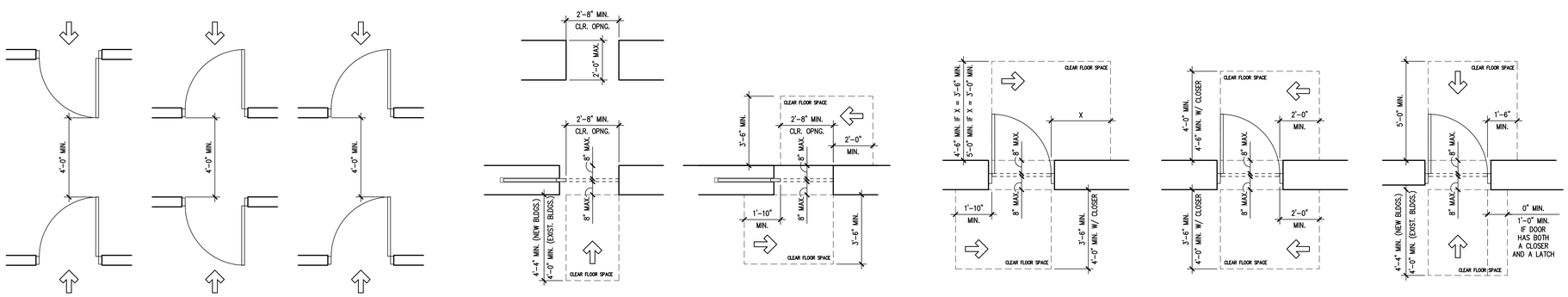

DOOR CLEARANCES (4)

SCALE: NONE

GENERAL NOTES

1. REFER TO DRAWING G100 FOR PROJECT GENERAL NOTES.
2. DETAILS ON THIS DRAWING ARE INTENDED TO DEPICT A RANGE OF DIFFERENT CONDITIONS. NOT ALL CONDITIONS DEPICTED MAY BE PRESENT IN THIS PROJECT.
3. DIMENSIONAL REQUIREMENTS DEPICTED ARE MEASURED TO FACE OF SURFACE FINISHES. ABSOLUTE DIMENSIONS ARE SUBJECT TO REASONABLE CONSTRUCTION TOLERANCES AS DETERMINED BY THE ARCHITECT/ENGINEER AND THE AUTHORITY HAVING JURISDICTION. CONSTRUCTED CLEARANCES, LENGTHS, WIDTHS, DEPTHS OR AREAS EXCEEDING INDICATED MAXIMUMS, LESS THAN INDICATED MINIMUMS OR OUTSIDE OF INDICATED RANGES WILL NOT BE ACCEPTED.
4. COORDINATE REQUIREMENTS DEPICTED ON THIS DRAWING WITH INFORMATION DEPICTED ON OTHER DRAWINGS. WHERE DIMENSIONS AND/OR CLEARANCES ON OTHER DRAWINGS ARE OR APPEAR TO BE LESS THAN THE MINIMUMS, GREATER THAN MAXIMUMS OR DEVIATE FROM HOLD DIMENSIONS DEPICTED ON THIS DRAWING, THE REQUIREMENTS OF THIS DRAWING SHALL TAKE PRECEDENCE.

Kluber
Architects + Engineers
Kluber, Inc.
Aurora, Illinois 60506
tel. 630.466.1213
Bloomington, Illinois 61704
tel. 309.430.0460
www.kluberinc.com

SUBAT NATURE CENTER

KENDALL COUNTY FOREST PRESERVE DISTRICT
4675 ELDAMAIN ROAD
PLANO, IL 60545

ISSUED	
04/10/24	OWNER REVIEW
04/11/24	BID DOCUMENTS

JOB NO.	23-429-1495
DRAWN	SKF
CHECKED	CDH
APPROVED	CJH

SHEET TITLE

ACCESSIBILITY REQUIREMENTS

SHEET NUMBER

G201

NOTE: SCALES DEPICTED ON THIS DRAWING ARE NOT CORRECT UNLESS PLOTTED SHEET SIZE IS 30 X 42 INCHES.

Copyright © 2024 KLUBER, INC.

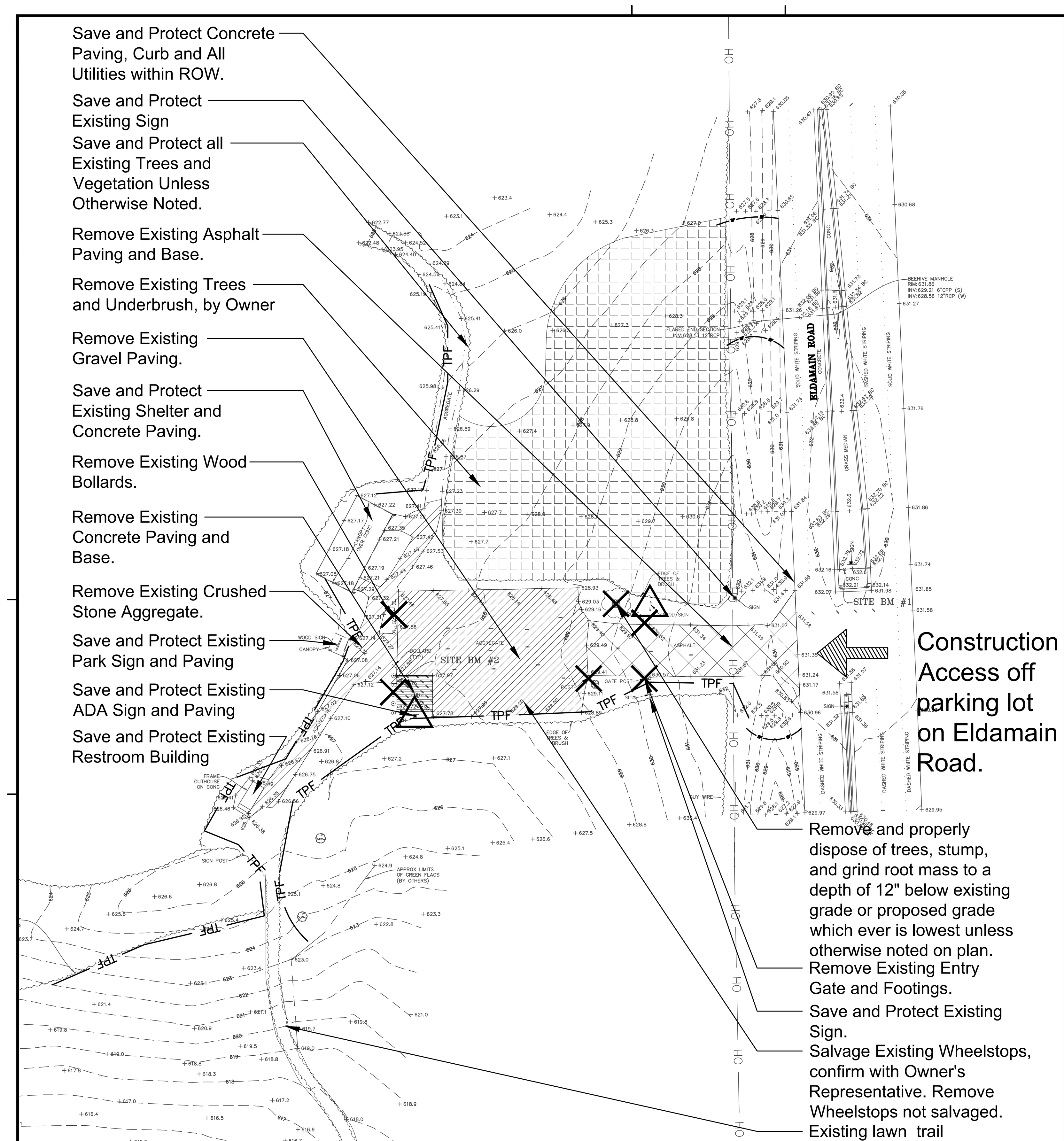

Parking Lot Enlargement

North

SCALE: 1" = 40'-0"

0 20' 40' 80' 120'

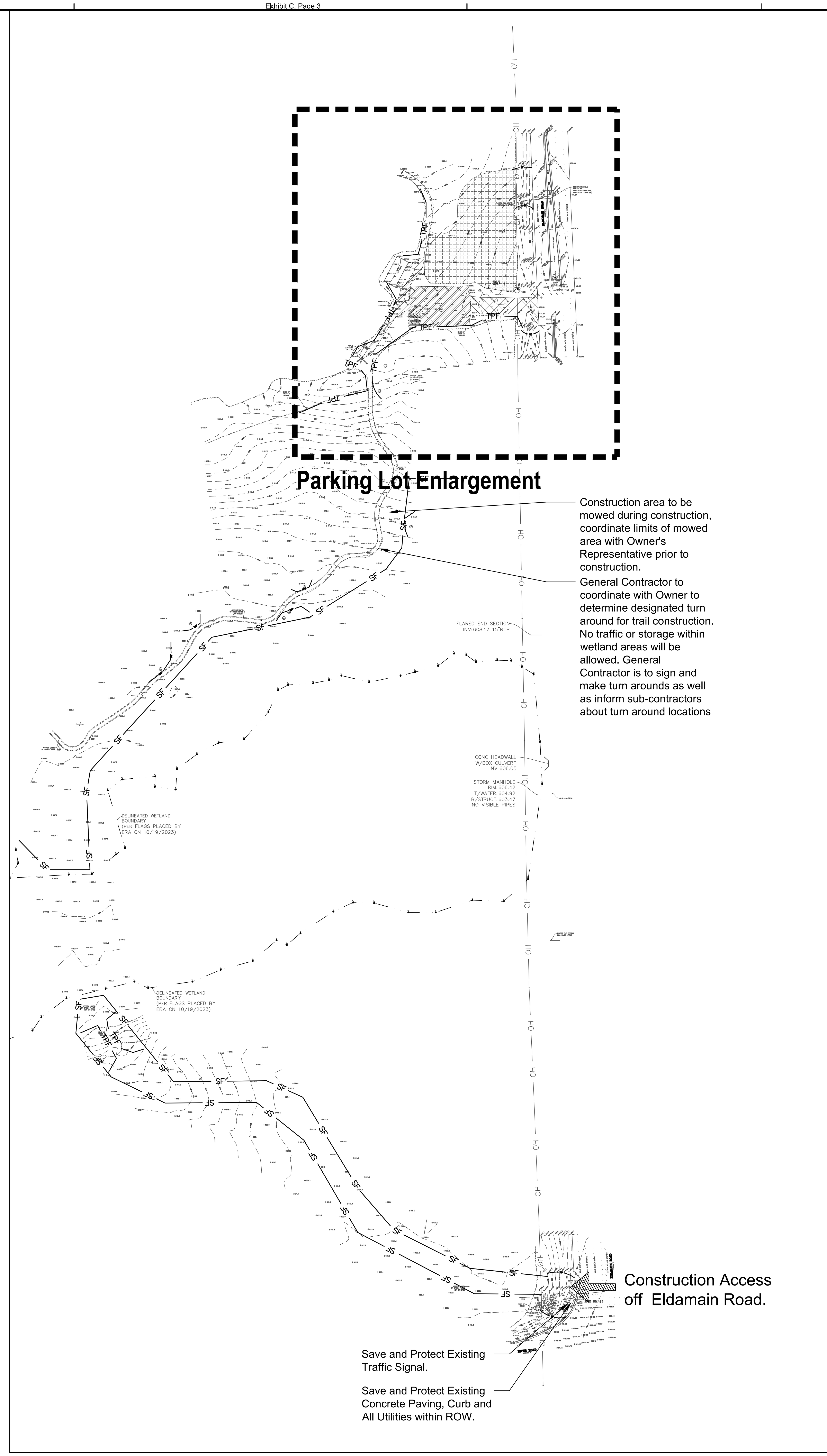

North

SCALE: 1" = 80'-0"

0 40' 80' 160' 240'

GENERAL NOTES: EXISTING CONDITIONS & REMOVALS

1. The Contractor is to locate all utilities, public and private, prior to beginning construction. Contractor will be responsible for any damages to utilities caused by their work. Contact J.U.L.I.E. 72 hours prior to construction at 1-800-982-0123 or (811) for location of utilities and contractor shall be responsible for protection of the same.
2. Site conditions are shown based upon available information, contractor to verify all existing conditions prior to bidding.
3. The contractor shall be responsible for the protection of all private utilities even though they may not be shown on the plans. Any utility damaged during the construction shall be repaired or replaced to the satisfaction of the Owner at the contractor's expense. No tree shall be planted within 10 lateral feet of any underground waterline, sewer line, transmission line or other utility.
4. Contours and elevations shown hereon are referenced to the North American vertical datum of 1988 (navd88)
5. A Topographic Survey was completed for the Owner by:
   JLH Land Surveying, Inc.
   910 Geneva Street
   Shorewood, Illinois 60404 Phone: 815-729-4000
6. The Contractor shall walk the site prior to submitting a bid to be fully familiar with site conditions.
7. The Contractor shall protect and preserve all section, property or survey reference markers.
8. Tree Protection Fence to be installed as shown on plans and details prior to beginning construction. (incidental to cost). Do not drive, store equipment or materials within dripline of existing trees that are to be saved. Hold necessary disturbance to a minimum.
9. Contractor will be held responsible for damage to items not scheduled for removal.
10. Contractor shall repair or replace all damaged sidewalks, curbs or paving to remain in place that were damaged as a result of work stated in contract documents.
11. No excavations are to be left open to foul weather, rain, snow, etc. which would necessitate further excavation and additional sub grade materials.
12. Work site safety is the responsibility of the Contractor.
13. Vehicular Construction access shall be at one location to minimize damage. Construction access shall be approved by the Owner's representative.
14. Construction Limits: Construction Limits are as noted on plans. Do not store equipment or stockpile materials outside of construction limits. Any areas disturbed as a result of construction shall be restored to lawn or other surface by contractor to match pre-construction condition.
15. Topsoil may be stockpiled for redistribution as needed. Excess topsoil, debris and plant material to be removed off site and disposed of legally.
16. Construction fence shall be installed prior to beginning construction. Construction fence to be free standing chainlink. (incidental to contract).
17. Place erosion control measures as required to eliminate sedimentation into non-construction areas and as shown on plans and details prior to beginning construction.
18. Before beginning work at the site and throughout the course of the work contractor to inspect and verify the location and condition of every item affected by the work under this contract and report discrepancies to the Owner's Representative before beginning work.
19. Should discrepancies appear among the contract documents or between the contract documents and existing conditions, the contractor shall request an interpretation from the Owner's Representative before bidding. If the contractor fails to make such requests, it is presumed that both provisions were included in the bid, and the Owner's Representative shall determine which of the conflicting requirements shall govern. The contractor shall perform the work at no additional cost to the Owner in accordance with the Owner's Representative determination. Where conflicts exists between or within the contract documents between and applicable standards, codes, ordinances or manufacturers recommendations, and clarification has not been requested from the Owner's Representative prior to bidding as provided for above, the more stringent or higher quality standard shall prevail. Large scale drawings shall take precedence over small scale drawings, figured dimensions on the drawings over scaled dimensions and noted material over graphic representations.
20. The contractor shall provide all work and materials which any section or part of the drawings, specifications or conditions require them to provide, regardless of whether such requirement is or is not faithfully repeated in other parts of the documents thereof to which the provisions might be appropriate.
21. All necessary site work permits will be obtained by Owner. Contractor and all subcontractors shall register and pay associated fees to the Building Department. Contractor is responsible for following permit requirements including coordination of inspections and/or reinspections and associated fees.
22. Contractor shall follow all permit requirements as part of the project.

PROJECT BENCHMARK

SITE BENCHMARK #1
Set cut cross on concrete median in Eldamain Road near the entrance of Subat Forest Preserve.
Elevation: 632.78 (NAVD 88)

SITE BENCHMARK #2
Set cut cross at the Northwest corner of concrete pad in aggregate parking area off the entrance to Subat Forest Preserve.
Elevation: 627.86 (NAVD 88)

SITE BENCHMARK #3
Set cut cross at the Northwest corner of concrete pad near the ADA ramp located at the Northwest corner of Eldamain Road and River Road.
Elevation: 621.28 (NAVD 88)

REMOVALS LEGEND

- Remove Existing Asphalt Paving
- Remove Existing Concrete Paving
- Remove Existing Gravel Paving
- Remove Existing Crushed Aggregate Paving
- Remove Existing Vegetation
- Remove and properly dispose of trees, stump, and grind root mass to a depth of 12" below existing grade or proposed grade which ever is lowest unless otherwise noted on plan.
- Remove and Dispose of Item as Marked
- Salvage and Relocate Item as Marked
- CL — Construction Limits
- TPF — Tree Protection Fence
- SF — Silt Fence

SURVEY LEGEND

- = PROPERTY LINE
- = LOT LINE/PARCEL LINE
- = EX. SANITARY LINE
- = EX. STORM LINE
- W = EX. WATER LINE
- X = EX. FENCE
- OH = EX. OVERHEAD WIRE (APPROXIMATE LOCATION)
- = EX. CONCRETE CURB & GUTTER
- 780 = EX. CONTOURS
- = EX. FIRE HYDRANT
- + 7XX.X = EX. SPOT ELEVATION
- X" = EX. CONIFEROUS TREE W/TRUNK SIZE IN INCHES
- X" = EX. DECIDUOUS TREE W/TRUNK SIZE IN INCHES
- = EX. BUSH

Kluber
Architects + Engineers

Kluber, Inc.
Aurora, Illinois 60506
tel. 630.406.1213
Bloomington, Illinois 61704
tel. 309.430.6460
www.kluberinc.com

uplandDesign ltd
Landscape Architecture & Park Planning
1250 W 18th St, Chicago, Illinois 60608
24042 Lockport St, Plainfield, Illinois 60544
815-254-0091 www.uplandDesign.com
IL License 060-007797 Upland #1191

SUBAT NATURE CENTER

KENDALL CO FOREST PRESERVE
ELDAMAIN RD
PLANO, IL 60545

CIVIL ENGINEER
Engineering Resource Associates
3s701 West Avenue, Suite 150
Warrenville, Illinois 60555
IL License 184-001186

ISSUED
04/11/24 BID DOCUMENTS

JOB NO.	23-429-1495
DRAWN	EM[
CHECKED	MK
APPROVED	MK

SHEET TITLE

EXISTING CONDITIONS & REMOVALS PLAN

SHEET NUMBER

L100

NOTE: SCALES DEPICTED ON THIS DRAWING ARE NOT CORRECT UNLESS PLOTTED SHEET SIZE IS 30 X 42 INCHES.

Copyright © 2024 KLUBER, INC.

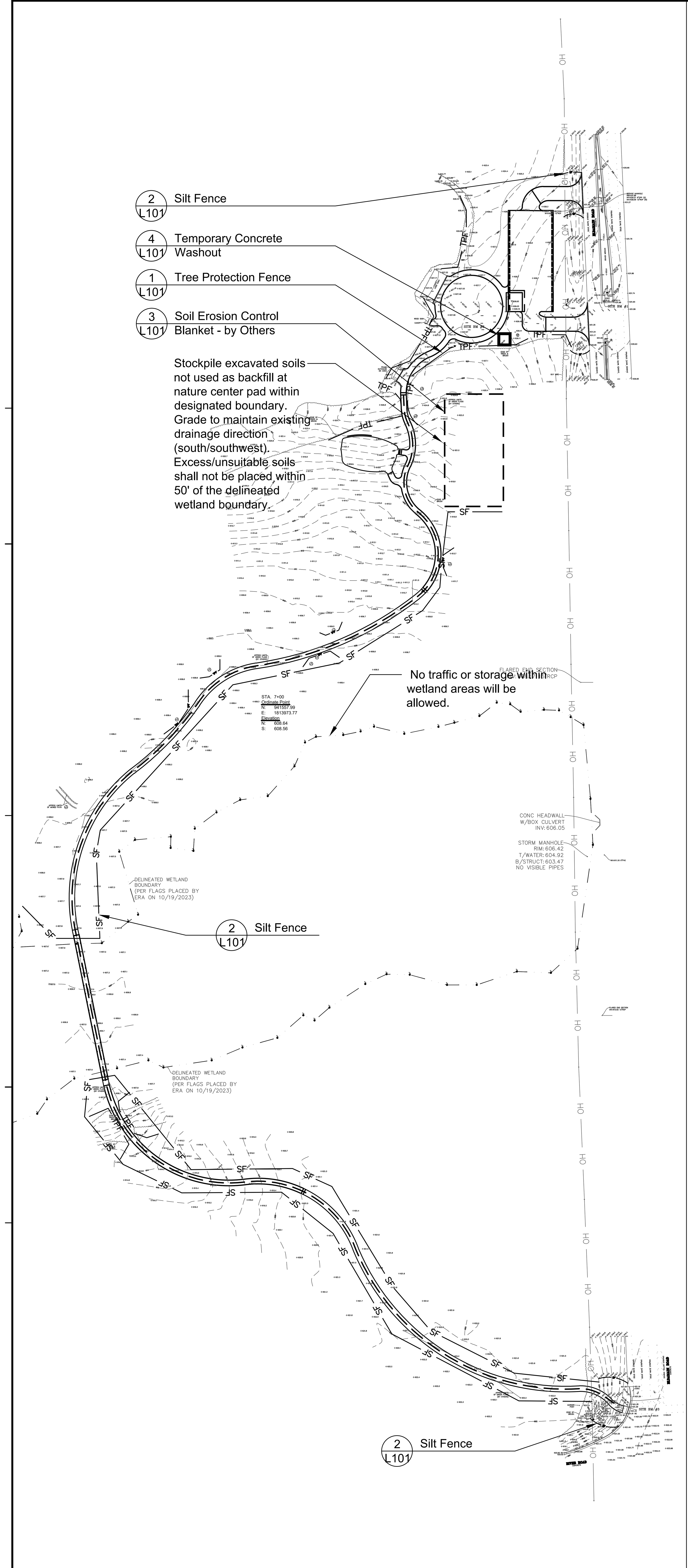

SCALE: 1" = 80'-0"

0 40' 80' 160' 240'

North

STORM WATER POLLUTION PREVENTION PLAN

THE FOLLOWING PLAN IS ESTABLISHED AND INCORPORATED IN THE PROJECT TO DIRECT THE CONTRACTOR IN THE PLACEMENT OF TEMPORARY EROSION AND SEDIMENT CONTROL SYSTEMS AND TO PROVIDE A STORM WATER POLLUTION PREVENTION PLAN FOR COMPLIANCE UNDER NPDES.

THE PURPOSE OF THIS PLAN IS TO MINIMIZE EROSION WITHIN THE CONSTRUCTION SITE AND TO LIMIT SEDIMENT FROM LEAVING THE CONSTRUCTION SITE BY UTILIZING PROPER TEMPORARY EROSION AND SEDIMENT CONTROL SYSTEMS AND PROVIDING GROUND COVER WITHIN A REASONABLE AMOUNT OF TIME.

CERTAIN SEDIMENT CONTROL FACILITIES SHALL BE INSTALLED BY THE CONTRACTOR AT THE BEGINNING OF CONSTRUCTION. OTHER ITEMS SHALL BE INSTALLED BY THE CONTRACTOR AS DIRECTED BY THE ENGINEER ON A CASE BY CASE SITUATION DEPENDING ON THE CONTRACTOR'S SEQUENCE OF ACTIVITIES, TIME OF YEAR, AND EXPECTED WEATHER CONDITIONS.

THE CONTRACTOR SHALL INSTALL PERMANENT EROSION CONTROL SYSTEMS AND SEEDING WITHIN A TIME FRAME SPECIFIED HEREIN AND AS DIRECTED BY THE ENGINEER, THEREFORE MINIMIZING THE AMOUNT OF AREA SUSCEPTIBLE TO EROSION AND REDUCING THE AMOUNT OF TEMPORARY SEEDING. THE ENGINEER WILL DETERMINE IF ANY TEMPORARY EROSION CONTROL SYSTEMS SHOWN IN THE PLAN CAN BE DELETED AND IF ANY ADDITIONAL TEMPORARY EROSION CONTROL SYSTEMS, WHICH ARE NOT INCLUDED IN THIS PLAN, SHALL BE ADDED. THE CONTRACTOR SHALL PERFORM ALL WORK AS DIRECTED BY THE ENGINEER AND AS SHOWN IN IDOT STANDARD 280001.

SECTION 280, TEMPORARY EROSION CONTROL, OF THE STANDARD SPECIFICATIONS ADDITIONALLY SUPPLEMENTS THIS PLAN.

SITE DESCRIPTION.
DESCRIPTION OF CONSTRUCTION ACTIVITY:

1. THE PROJECT IS LOCATED IN SUBAT FOREST PRESERVE, KENDALL COUNTY, IL.

2. THE SUBAT FOREST PRESERVE PROJECT SHALL GENERALLY CONSIST OF THE FOLLOWING:

    1.) INSTALLATION OF NEW ASPHALT AND LIMESTONE WALKING PATHS;
    2.) REMOVAL AND REPLACEMENT/EXPANSION OF A PARKING LOT;
    3.) INSTALLATION OF PARKING LOT ENTRANCES ALONG ELDAMAIN ROAD;
    4.) CULVERT INSTALLATION WITHIN THE ROADSIDE DITCH ALONG ELDAMAIN ROAD AND THE NORTHWEST CORNER OF THE INTERSECTION OF ELDAMAIN ROAD AND RIVER ROAD;
    5.) INSTALLATION OF A NATURE CENTER PAVILION AND ASSOCIATED CONCRETE PAD; AND
    6.) INSTALLATION OF A BOARDWALK

DESCRIPTION OF INTENDED SEQUENCE FOR MAJOR CONSTRUCTION ACTIVITIES WHICH WILL DISTURB SOILS FOR MAJOR PORTION OF THE CONSTRUCTION SITE:

1. INSTALL SILT FENCING, TREE PROTECTION FENCING, STABILIZED CONSTRUCTION ENTRANCE, AND TEMPORARY CONCRETE WASHOUT.
2. INSTALL FLARED END PROTECTION IMMEDIATELY FOLLOWING INSTALLATION OF CULVERTS.
3. SITE SHALL BE TEMPORARILY STABILIZED IMMEDIATELY FOLLOWING GRADING COMPLETION.
4. THE SITE SHALL BE SEEDED AND STABILIZED WITH EROSION CONTROL MAT UPON COMPLETION OF GRADING.
5. TEMPORARY EROSION CONTROL MEASURES WILL BE REMOVED FOLLOWING FINAL STABILIZATION.

AREA OF CONSTRUCTION SITE:

APPROXIMATELY 1.65 ACRES WILL BE DISTURBED BY EXCAVATION, GRADING, AND OTHER ACTIVITIES.

OTHER REPORTS, STUDIES AND PLANS, WHICH AID IN THE DEVELOPMENT OF THE STORM WATER POLLUTION PREVENTION PLAN AS REFERENCED DOCUMENTS:

1. INFORMATION OF THE SOILS AND TERRAIN WITHIN THE SITE WAS OBTAINED FROM TOPOGRAPHIC SURVEYS AND SOIL BORINGS THAT WERE UTILIZED FOR THE DEVELOPMENT OF THE PROPOSED TEMPORARY EROSION AND SEDIMENT CONTROL SYSTEMS.
2. PROJECT PLAN DOCUMENTS, SPECIFICATIONS AND SPECIAL PROVISIONS, AND PLAN DRAWINGS INDICATING DRAINAGE PATTERNS AND APPROXIMATE SLOPES ANTICIPATED AFTER GRADING ACTIVITIES WERE UTILIZED FOR THE PROPOSED PLACEMENT OF THE TEMPORARY EROSION CONTROL SYSTEMS.

DRAINAGE TRIBUTARIES AND SENSITIVE AREAS RECEIVING RUNOFF FROM THIS CONSTRUCTION SITE:

1. ON-SITE WETLANDS

THIS PLAN HAS BEEN PREPARED TO COMPLY WITH THE PROVISIONS OF THE NPDES PERMIT NUMBER ILR10 ISSUED BY THE ILLINOIS ENVIRONMENTAL PROTECTION AGENCY FOR STORM WATER DISCHARGES FROM CONSTRUCTION SITE ACTIVITIES.

I CERTIFY UNDER PENALTY OF LAW THAT THIS DOCUMENT AND ALL ATTACHMENTS WERE PREPARED UNDER MY DIRECTION OR SUPERVISION IN ACCORDANCE WITH A SYSTEM DESIGNED TO ASSURE THAT QUALIFIED PERSONNEL PROPERLY GATHERED AND EVALUATED THE INFORMATION SUBMITTED. BASED ON MY INQUIRY OF THE PERSON OR PERSONS WHO MANAGE THE SYSTEM, OR THOSE PERSONS DIRECTLY RESPONSIBLE FOR GATHERING THE INFORMATION, THE INFORMATION SUBMITTED IS TO THE BEST OF MY KNOWLEDGE AND BELIEF, TRUE, ACCURATE AND COMPLETE. I AM AWARE THAT THERE ARE SIGNIFICANT PENALTIES FOR SUBMITTING FALSE INFORMATION, INCLUDING THE POSSIBILITY OF FINE AND IMPRISONMENT FOR KNOWING VIOLATIONS.

ENGINEER: ____________ DATE ________.

SEDIMENT EROSION CONTROL AND POLLUTION PREVENTION NOTES:

1. DURING CONSTRUCTION, AREAS OUTSIDE THE CONSTRUCTION LIMITS SHALL BE PROTECTED. THE CONTRACTOR SHALL NOT USE THIS AREA FOR STAGING, PARKING OF VEHICLES OF CONSTRUCTION EQUIPMENT, STORAGE OF MATERIALS OR OTHER CONSTRUCTION RELATED ACTIVITIES.
2. CONSTRUCTION EQUIPMENT SHALL BE STORED AND FUELED ONLY AT DESIGNATED LOCATIONS. ALL NECESSARY MEASURES SHALL BE TAKEN TO CONTAIN ANY FUEL OR OTHER POLLUTANT IN ACCORDANCE WITH EPA WATER QUALITY REGULATIONS. LEAKING EQUIPMENT OR SUPPLIES SHALL BE IMMEDIATELY REPAIRED OR REMOVED FROM THE SITE.
3. TEMPORARY SEDIMENT CONTROL SYSTEMS SHALL BE LEFT IN PLACE WITH PROPER MAINTENANCE UNTIL PERMANENT EROSION CONTROL IS IN PLACE AND WORKING PROPERLY AND ALL PERMANENT VEGETATION IS GROWING AND THRIVING.
4. EROSION CONTROL MEASURES SHALL BE INSTALLED PRIOR TO START OF CONSTRUCTION.
5. ALL EROSION CONTROL MEASURES MUST BE INSPECTED WEEKLY AND AFTER EACH ½" RAIN EVENT.
6. THE EROSION CONTROL BLANKET AND/OR STRAW MULCH WITH NETTING (DEPENDING ON SLOPE, SLOPE LENGTH AND FLOW RATES) SHALL BE INSTALLED ON ALL SLOPES AND IN CRITICAL AREAS (I.E. POND PERIMETER, BERMS, ETC.) IMMEDIATELY UPON FINAL GRADING
7. IN AREAS WHERE WORK IS COMPLETE, PERMANENT STABILIZATION SHALL OCCUR WITHIN 7 DAYS OF COMPLETION, AND IN AREAS WHERE WORK HAS TEMPORARILY CEASED FOR 14 DAYS OR MORE, TEMPORARY STABILIZATION SHALL OCCUR BY THE 7TH DAY AFTER WORK HAS CEASED.
8. WINTER SHUTDOWN SHALL BE ADDRESSED EARLY IN THE FALL GROWING SEASON SO THAT SLOPES AND OTHER BARE EARTH AREAS MAY BE STABILIZED WITH TEMPORARY AND/OR PERMANENT VEGETATIVE COVER FOR PROPER EROSION AND SEDIMENT CONTROL.
9. ALL ADJACENT STREETS MUST BE KEPT CLEAR OF DEBRIS, INSPECTED DAILY, AND CLEANED WHEN NECESSARY AND AS DIRECTED BY ENGINEER.
10. UNLESS OTHERWISE INDICATED, ALL VEGETATIVE AND STRUCTURAL EROSION AND SEDIMENT CONTROL PRACTICES WILL BE CONSTRUCTED ACCORDING TO MINIMUM STANDARDS AND SPECIFICATIONS IN THE MOST RECENT ILLINOIS URBAN MANUAL.
11. THE COUNTY MUST BE NOTIFIED ONE WEEK PRIOR TO THE PRE-CONSTRUCTION CONFERENCE, ONE WEEK PRIOR TO THE COMMENCEMENT OF LAND DISTURBING ACTIVITIES, AND ONE WEEK PRIOR TO THE FINAL INSPECTION.
12. A COPY OF THE APPROVED EROSION AND SEDIMENT CONTROL PLAN SHALL BE MAINTAINED ON THE SITE AT ALL TIMES.
13. PRIOR TO COMMENCING LAND-DISTURBING ACTIVITIES IN AREAS OTHER THAN INDICATED ON THESE PLANS (INCLUDING BUT NOT LIMITED TO, ADDITIONAL PHASES OF DEVELOPMENT AND OFF-SITE BORROW OR WASTE AREAS) A SUPPLEMENTARY EROSION CONTROL PLAN SHALL BE SUBMITTED TO THE OWNER FOR REVIEW BY THE COUNTY.
14. THE CONTRACTOR IS RESPONSIBLE FOR INSTALLATION OF ANY ADDITIONAL EROSION CONTROL MEASURES NECESSARY TO PREVENT EROSION AND SEDIMENTATION AS DETERMINED BY THE COUNTY.
15. NO WORK SHALL BE PERFORMED IN FLOWING WATER. WORK IN AND NEAR THE CRITICAL AREAS SHOULD BE ISOLATED FROM CONCENTRATED FLOWS OR STREAM FLOW. ONCE WORK IN THIS AREA BEGINS, PRIORITY SHALL BE GIVEN TO THE COMPLETION OF THE WORK AND FINAL STABILIZATION OF ALL DISTURBED AREAS.
16. IT IS THE RESPONSIBILITY OF THE LANDOWNER AND/OR GENERAL CONTRACTOR TO INFORM ANY SUB-CONTRACTOR(S) WHO MAY PERFORM WORK ON THIS PROJECT, OF THE REQUIREMENTS IN IMPLEMENTING AND MAINTAINING THESE EROSION CONTROL PLANS AND ASSURE COMPLIANCE WITH ALL APPLICABLE LOCAL, STATE AND FEDERAL REGULATIONS.
17. EXCAVATED AREAS SHALL BE PERMANENTLY SEEDED IMMEDIATELY AFTER FINAL GRADING. IF NOT, THEY SHALL BE TEMPORARILY SEEDED IF NO CONSTRUCTION ACTIVITY IN THE AREA IS PLANNED FOR SEVEN (7) DAYS.
18. TEMPORARY EROSION CONTROL SEEDING SHALL BE APPLIED AT A RATE OF 50 LBS/ACRES.
19. CONSTRUCTION IS COMPLETE AFTER ACCEPTANCE BY THE OWNER. MAINTENANCE UP TO THIS DATE WILL BE BY THE CONTRACTOR.
20. SEDIMENT COLLECTED DURING CONSTRUCTION BY THE VARIOUS TEMPORARY SEDIMENT CONTROL SYSTEMS SHALL BE DISPOSED OF ON THE SITE ON A REGULAR BASIS, AS DIRECTED BY THE ENGINEER. THE COST OF THIS MAINTENANCE SHALL BE PAID FOR AT THE CONTRACT UNIT PRICE PER CUBIC YARD FOR EARTH EXCAVATION.
21. ALL TEMPORARY EROSION AND SEDIMENT CONTROL MEASURES SHALL BE REMOVED WITHIN 30 DAYS AFTER FINAL STABILIZATION IS ACHIEVED. TRAPPED SEDIMENT RESULTING FROM TEMPORARY MEASURES SHALL BE PROPERLY DISPOSED OF PRIOR TO PERMANENT STABILIZATION.
22. ALL EROSION AND SEDIMENT CONTROL PRODUCTS FURNISHED SHALL BE SPECIFICALLY RECOMMENDED BY THE MANUFACTURER FOR THE USE SPECIFIED IN THE EROSION AND SEDIMENT CONTROL PLAN. PRIOR TO THE APPROVAL AND USE OF THE PROJECT, THE CONTRACTOR SHALL SUBMIT TO THE ENGINEER A NOTARIZED CERTIFICATION BY THE PRODUCER STATING THE INTENDED USE OF THE PRODUCT AND THAT THE PHYSICAL PROPERTIES REQUIRED FOR THIS APPLICATION ARE MET OR EXCEEDED. THE CONTRACTOR SHALL PROVIDE MANUFACTURER INSTALLATION PROCEDURES TO FACILITATE THE ENGINEER IN CONSTRUCTION INSPECTION.
23. THE DRAWINGS, SPECIFICATIONS AND SPECIAL PROVISIONS WILL ENSURE THAT EXISTING VEGETATION IS PRESERVED WHERE ATTAINABLE AND DISTURBED PORTIONS OF THE SITE WILL BE STABILIZED. STABILIZATION PRACTICES INCLUDE TEMPORARY SEEDING, PERMANENT SEEDING, MULCHING, PROTECTION OF TREES, PRESERVATION OF NATURAL VEGETATION, AND OTHER APPROPRIATE MEASURES AS DIRECTED BY THE ENGINEER. STABILIZATION MEASURES SHALL BE INITIATED AS SOON AS PRACTICABLE IN PORTIONS OF THE SITE WHERE CONSTRUCTION ACTIVITIES HAVE TEMPORARILY OR PERMANENTLY CEASED, BUT IN NO CASE MORE THAN 7 DAYS AFTER THE CONSTRUCTION ACTIVITY IN THAT PORTION OF THE SITE HAS TEMPORARILY OR PERMANENTLY CEASED.
   a. AREAS OF EXISTING VEGETATION, WOOD AND GRASSLANDS, OUTSIDE THE PROPOSED CONSTRUCTION LIMITS SHALL BE IDENTIFIED BY THE ENGINEER FOR PRESERVING AND SHALL BE PROTECTED FROM CONSTRUCTION ACTIVITIES.
   b. DEAD, DISEASED, OR UNSUITABLE VEGETATION WITHIN THE SITE SHALL BE REMOVED AS DIRECTED BY THE ENGINEER.
   c. BARE AND SPARSELY VEGETATED GROUND IN HIGH ERODIBLE AREAS AS DETERMINED BY THE ENGINEER SHALL BE TEMPORARILY SEEDED AT THE BEGINNING OF CONSTRUCTION WHERE NO CONSTRUCTION ACTIVITIES ARE EXPECTED WITHIN SEVEN (7) DAYS.
24. THE SITE SHOULD BE PHASED IN A WAY THAT REDUCES THE AMOUNT OF STRIPPED, UNSTABILIZED AREAS WITHIN THE SITE AT ANY ONE TIME. MASS GRADING THE ENTIRE SITE SHOULD BE AVOIDED AS TO PREVENT EROSION ON SITE AND SEDIMENTATION ISSUES DOWNSTREAM.
25. BARRIER PROTECTION SHALL BE PLACED AT THE LIMITS OF SOIL DISTURBANCE FOR ALL UNDISTURBED WETLAND AREAS.

CONTRACTOR'S CERTIFICATION

"I CERTIFY UNDER PENALTY OF LAW THAT I UNDERSTAND THE TERMS AND CONDITIONS OF THE GENERAL NATIONAL POLLUTANT DISCHARGE ELIMINATION SYSTEM (NPDES) PERMIT (ILR 10) THAT AUTHORIZES THE STORMWATER DISCHARGES ASSOCIATED WITH ACTIVITY FROM THE CONSTRUCTION SITE IDENTIFIED AS PART OF THIS CERTIFICATION.

GENERAL CONTRACTOR

SIGNATURE TITLE DATE

COMPANY

OWNER'S CERTIFICATION

"I CERTIFY UNDER PENALTY OF LAW THAT THIS DOCUMENT AND ALL ATTACHMENTS WERE PREPARED UNDER MY DIRECTION OR SUPERVISION IN ACCORDANCE WITH A SYSTEM DESIGNED TO ASSURE THAT QUALIFIED PERSONNEL PROPERLY GATHERED AND EVALUATED THE INFORMATION SUBMITTED. BASED ON MY INQUIRY OF THE PERSON OR PERSONS WHO MANAGE THE SYSTEM, OR THOSE PERSONS DIRECTLY RESPONSIBLE FOR GATHERING THE INFORMATION, THE INFORMATION SUBMITTED IS, TO THE BEST OF MY KNOWLEDGE AND BELIEF, TRUE, ACCURATE AND COMPLETE. I AM AWARE THERE ARE SIGNIFICANT PENALTIES FOR SUBMITTING FALSE INFORMATION, INCLUDING THE POSSIBILITY OF FINE AND IMPRISONMENT FOR KNOWING VIOLATIONS."

OWNER

SIGNATURE TITLE DATE

COMPANY

REMOVALS LEGEND

TPF	Tree Protection Fence
SF	Silt Fence

TREE PROTECTION - FENCING

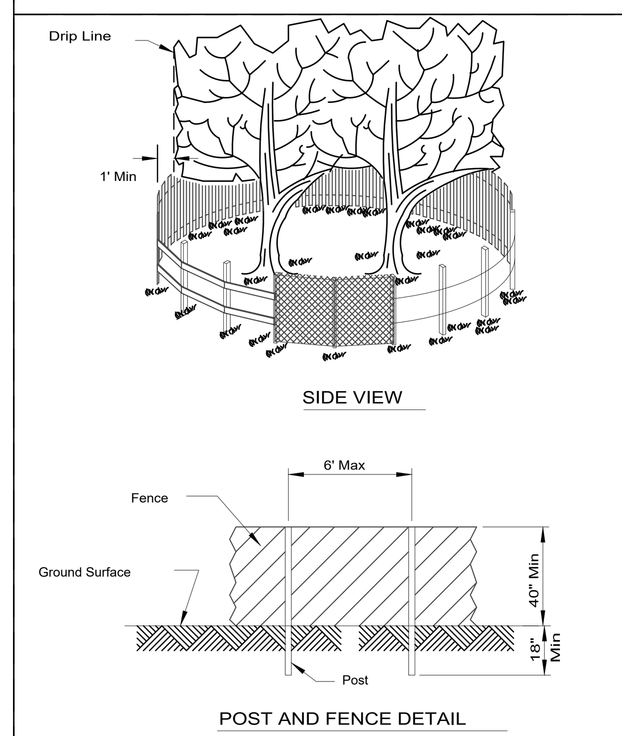

NOTES:
1. The fence shall be located a minimum of 1 foot outside the drip line of the tree to be saved and in no case closer than 5 feet to the trunk of any tree.
2. Fence posts shall be either standard steel posts or wood posts with a minumum cross sectional area of 3.0 sq. in.
3. The fence may be either 40" high snow fence, 40" plastic web fencing or any other material as approved by the engineer/inspector.

REFERENCE Project ____ Designed ____ Date ____ Checked ____ Date ____ Approved ____ Date ____ | NRCS Natural Resources Conservation Service | STANDARD DWG. NO. IL-690 SHEET 1 OF 1 DATE 4-7-94

1 Tree Protection Fence
SCALE: NTS — d-NRCS-IL690-tree protection fence_12

AUTOCAD2006

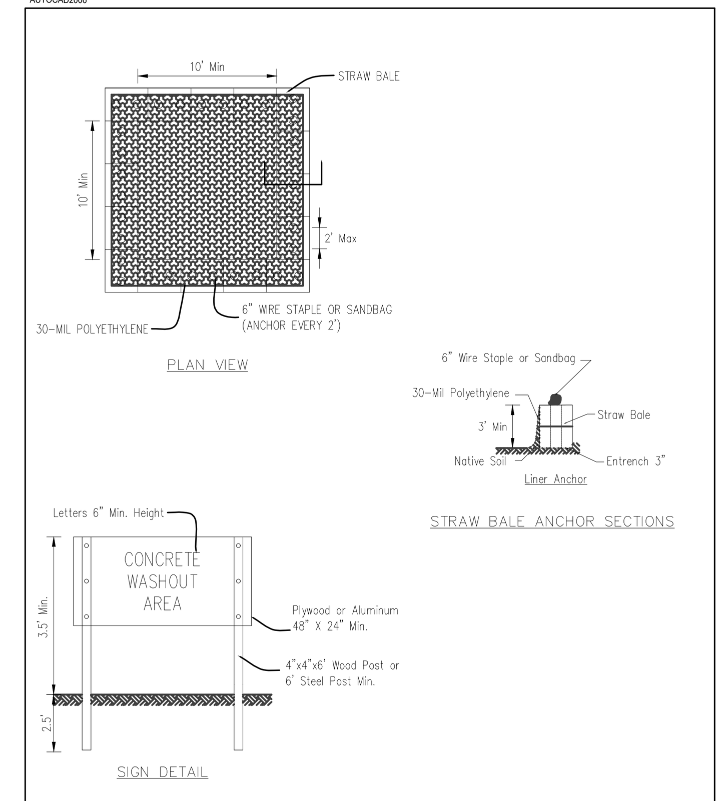

NOTES:
1. Maintaining temporary concrete washout facilities shall include removing and disposing of hardend concrete and/or slurry and returning the facilities to a functional condition.
2. Facility shall be cleaned or reconstructed in a new area once washout becomes two-thirds full.
3. Each straw bale is to be staked in place using (2) 2"x2"x4' wooden stakes.

TEMPORARY CONCRETE WASHOUT FACILITY – STRAW BALE

4 Temporary Concrete Washout
SCALE: NTS — d-IUM-654SB-concrete washout_12

SILT FENCE PLAN

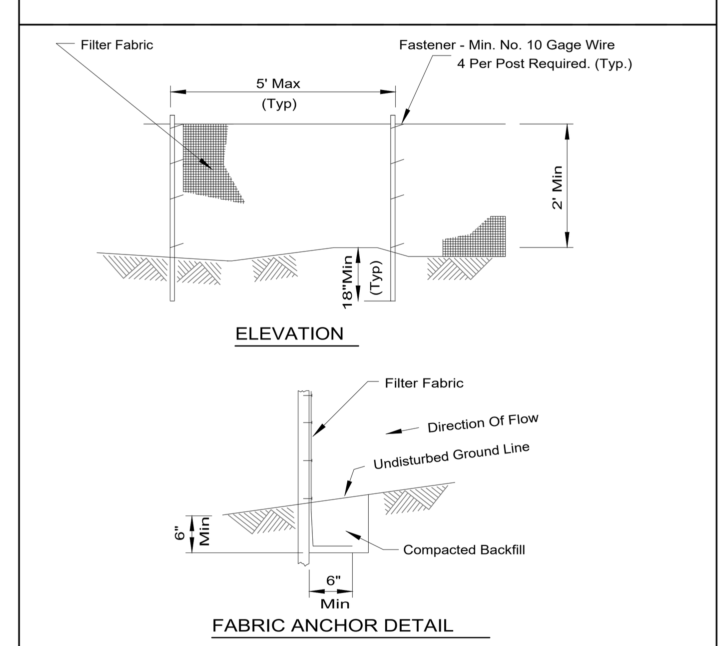

NOTES:
1. Temporary sediment fence shall be installed prior to any grading work in the area to be protected. They shall be maintained throughout the construction period and removed in conjunction with the final grading and site stabilization.
2. Filter fabric shall meet the requirements of material specification 592 Geotextile Table 1 or 2, Class with equivalent opening size of at least 30 for nonwoven and 40 for woven.
3. Fence posts shall be either standard steel post or wood post with a minimum cross-sectional area of 3.0 sq. in.

REFERENCE Project ____ Designed ____ Date ____ Checked ____ Date ____ Approved ____ Date ____ | STANDARD DWG. NO. IUM-620A SHEET 1 OF 2 DATE 3-16-12

SILT FENCE - SPLICING TWO FENCES

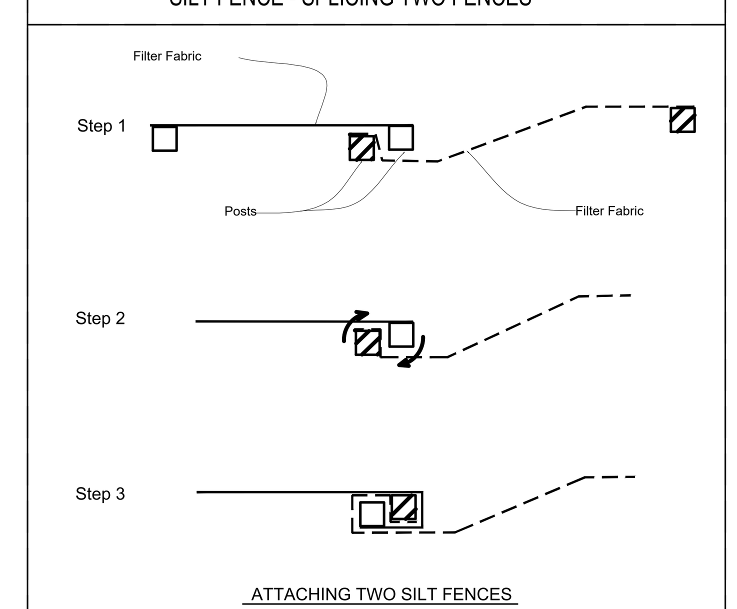

1. Place the end post of the second fence inside the end post of the first fence. Rotate both posts at least 180 degrees in a clockwise direction to create a tight seal with the fabric material.
2. Cut the fabric near the bottom of the stakes to accommodate the 6" flap. Drive both posts a minimum of 18 inches into the ground and bury the flap.
3. Compact backfill (particularly at splices) completely to prevent stormwater piping.
4.
5.

REFERENCE Project ____ Designed ____ Date ____ Checked ____ Date ____ Approved ____ Date ____ | STANDARD DWG. NO. IUM-620B(W) SHEET 1 OF 1 DATE 2-06-2012

2 Silt Fence
SCALE: NTS — d-IUM 620B-silt fence_12

AUTOCAD2006

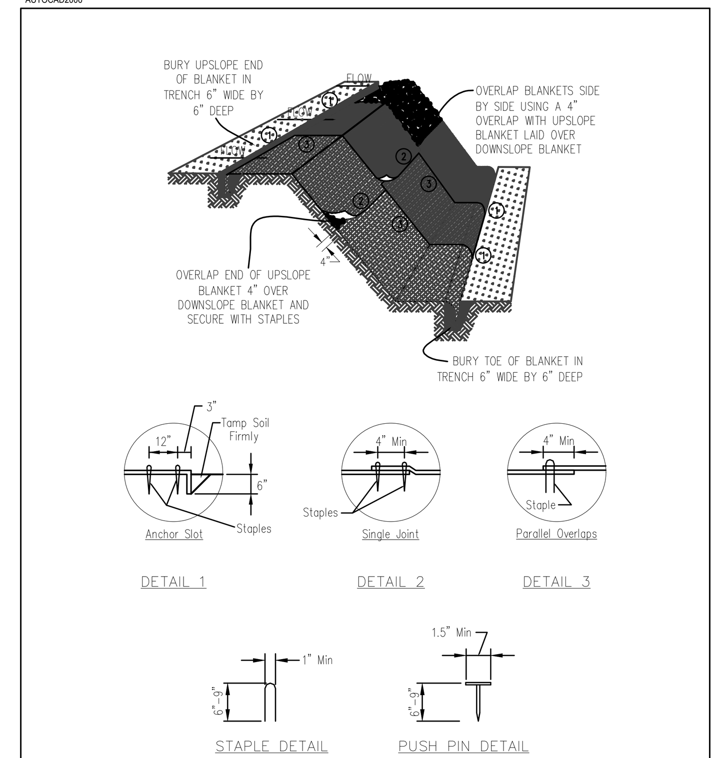

NOTES:
1. Staples shall be placed in a diamond pattern at 2 per s.y. for stiched blankets. Non-stiched shall use 4 staples per s.y. of material. This equates to 200 staples with stiched blanket and 400 stapels with non-stiched blanket per 100 s.y. of material.
2. Staple or push pin lengths shall be selected based on soil type and conditions. (minimum staple length is 6")
3. Erosion control material shall be placed in contact with the soil over a prepared seedbed.
4. All anchor slots shall be stapled at approximately 12" intervals.

BIONET S75BN OR APPROVED EQUAL.

EROSION CONTROL BLANKET INSTALLATION DETAILS

3 Erosion Control Blanket
SCALE: NTS — d-IUM-530-erosion control blanket_12

Kluber Architects + Engineers

Kluber, Inc.
Aurora, Illinois 60506
tel. 630.406.1213
Bloomington, Illinois 61704
tel. 309.430.6460
www.kluberinc.com

uplandDesign ltd
Landscape Architecture & Park Planning
1250 W 18th St, Chicago, Illinois 60608
24042 Lockport St, Plainfield, Illinois 60544
815-254-0091 www.uplandDesign.com
IL License 060-007797 Upland #1191

SUBAT NATURE CENTER
KENDALL CO FOREST PRESERVE
ELDAMAIN RD
PLANO, IL 60545

CIVIL ENGINEER
Engineering Resource Associates
3s701 West Avenue, Suite 150
Warrenville, Illinois 60555
IL License 184-001186

ISSUED
04/11/24 BID DOCUMENTS

JOB NO.	23-429-1495
DRAWN	EM
CHECKED	MK
APPROVED	MK

SHEET TITLE
STORMWATER POLLUTION PREVENTION PLAN

SHEET NUMBER
L101

NOTE: SCALES DEPICTED ON THIS DRAWING ARE NOT CORRECT UNLESS PLOTTED SHEET SIZE IS 30 X 42 INCHES.

Copyright © 2024 KLUBER, INC.

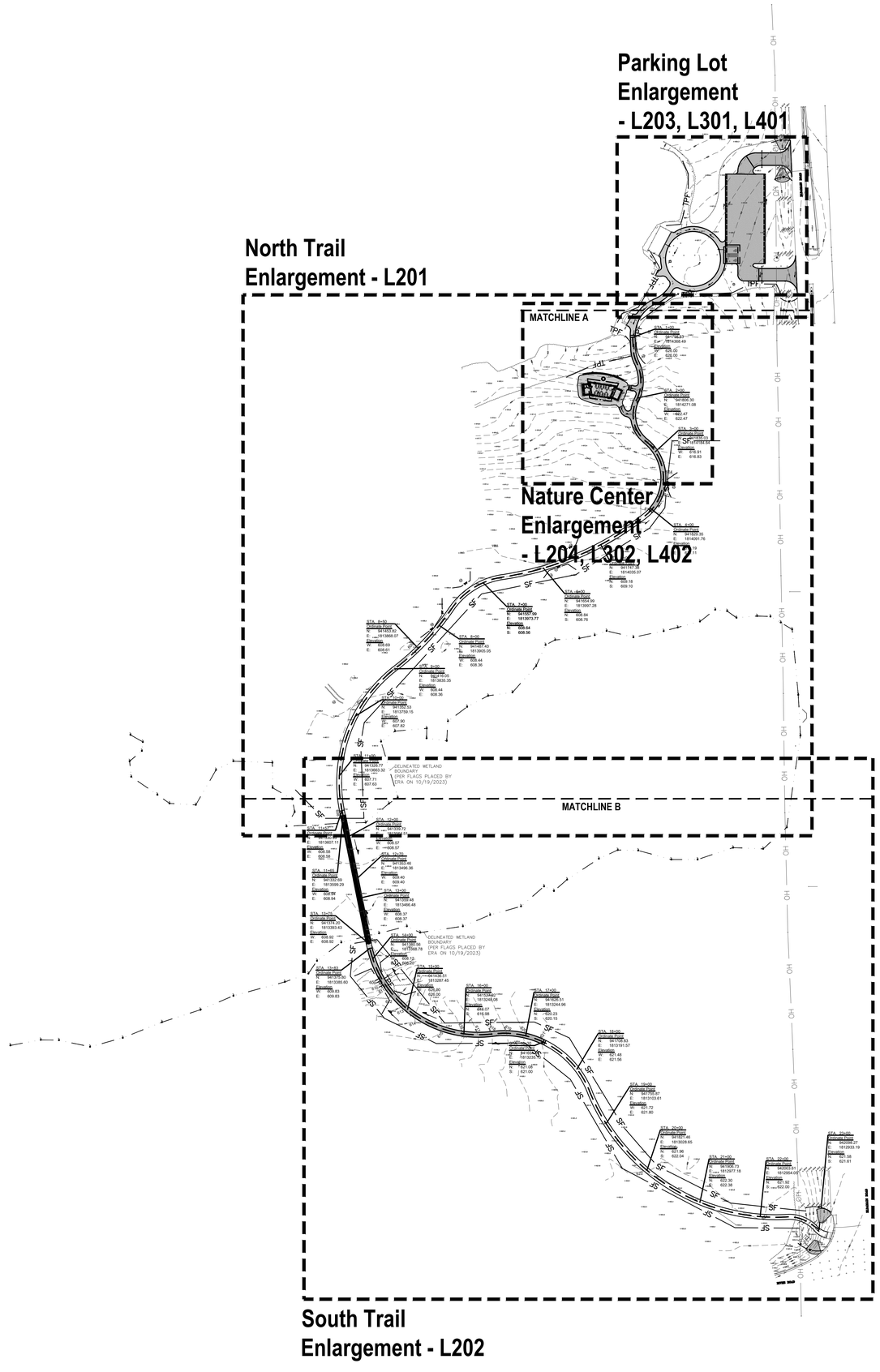

GENERAL NOTES: LAYOUT

1. It is the responsibility of the Contractor to perform layout of all project elements and points for review by Owner prior to construction. (This work is considered incidental to the project and not paid as a separate bid item).
2. The contractor shall be responsible for all materials and quantities as required to complete the work in accordance with the plans and specifications. The contractor will notify the Owner's Representative in writing of any discrepancies or changes required to complete the work before any action may be taken. All changes or change orders must be approved by the Owner's Representative and Owner before any changes are executed.

REFERENCED SPECIFICATIONS AND CODES

1. The Americans with Disabilities Act and the Illinois Accessibility Code.
2. The Illinois Procedures and Standards for Urban Soil Erosion and Sedimentation Control, and IEPA Standards and Specifications for Soil Erosion and Sedimentation Control.
3. U.S. Soil Conservation Service Field Engineering Handbook
4. All codes and ordinances of the City of Plano, United States Army Corp of Engineers, Illinois Department of Natural Resources, Kendall County Soil and Water Conservation Districts, and all agencies having jurisdiction.
5. All requirements of the Occupational Safety and Health Administration.
6. The cited standard specifications, codes and permits, with these construction plans and details, are all to be considered part of the work, incidental items or accessories necessary to complete this work may not be specifically noted but are considered a part of these improvements.
7. In case of conflict, the more restrictive provision shall apply.

GENERAL NOTES: DIMENSION

1. Paving radii shall be formed completely and shall smoothly transition into tangents and adjoining lines. Dimensions are to face of curb and edge of pavement unless otherwise specified.
2. Dimensions are in feet or degrees. Dimensions are perpendicular & parallel unless otherwise noted.
3. See Layout Plan, Sheet L300 for additional general notes and referenced specifications and codes.
4. Contractor shall perform all construction layout for the project. Contractor will be provided with an electronic file in AutoCAD format to assist with layout. Neither the Owner nor their representative shall be responsible for setting additional layout points.

GENERAL NOTES: GRADING

1. Finished surfaces to be smooth and even with no abrupt or awkward changes in grade. Paving to meet adjacent grades flush and smooth.
2. Contractor shall restore all areas disturbed as a result of construction.
3. All walks, drives and paved areas are to follow ADA per incorporated specifications. Any deviation shall be removed and reinstalled to follow this law.
4. All Accessible Route paving shall not exceed 4.5% in any direction. Cross slopes shall be less than 2%. Contractor shall slope all walks and slabs to eliminate ponding. ADA Turning Radius paving shall be less than 2% in all directions.
5. This work shall include the excavation, stockpile, and placement of topsoil and suitable excavated material.
6. Follow the Illinois Procedures and Standards for Urban Soil Erosion and Sedimentation Control, IEPA Standards and Specifications for Soil Erosion and Sedimentation Control, and U.S. Soil Conservation Service Field Engineering Handbook.
7. Transitions between paving types (i.e. concrete to asphalt) shall be smooth. Transitions not to exceed 1/4" vertical or horizontal difference.

LEGEND

	Asphalt Paving
	Concrete Paving
	Crushed Limestone Surfacing
	Gravel Surfacing
	Boardwalk
EJ	Concrete Expansion Joints
—— CL ——	Construction Limits / Construction Fence

North

SCALE: 1" = 80'-0"

0 40' 80' 160' 240'

Kluber
Architects + Engineers

Kluber, Inc.
Aurora, Illinois 60506
tel: 630.406.1213
Bloomington, Illinois 61704
tel: 309.430.6460
www.klubericc.com

uplandDesign ltd
Landscape Architecture & Park Planning
1250 W. Hwy. 52, Suite 102, Morris, Illinois 60450
24042 Lockport St., Plainfield, Illinois 60544
815-254-0091 www.uplandDesign.com
IL License 060-007797 Upland #1191

SUBAT NATURE CENTER

KENDALL CO FOREST PRESERVE
ELDAMAIN RD
PLANO, IL 60545

CIVIL ENGINEER
Engineering Resource Associates
3s701 West Avenue, Suite 150
Warrenville, Illinois 60555
IL License 184-001186

ISSUED	
04/11/24	BID DOCUMENTS

JOB NO.	23-429-1495
DRAWN	EM
CHECKED	MK
APPROVED	MK

SHEET TITLE

LAYOUT PLAN - OVERALL

SHEET NUMBER

L200

NOTE: SCALES DEPICTED ON THIS DRAWING ARE NOT CORRECT UNLESS PLOTTED SHEET SIZE IS 30 X 42 INCHES.

Copyright © 2024 KLUBER, INC.

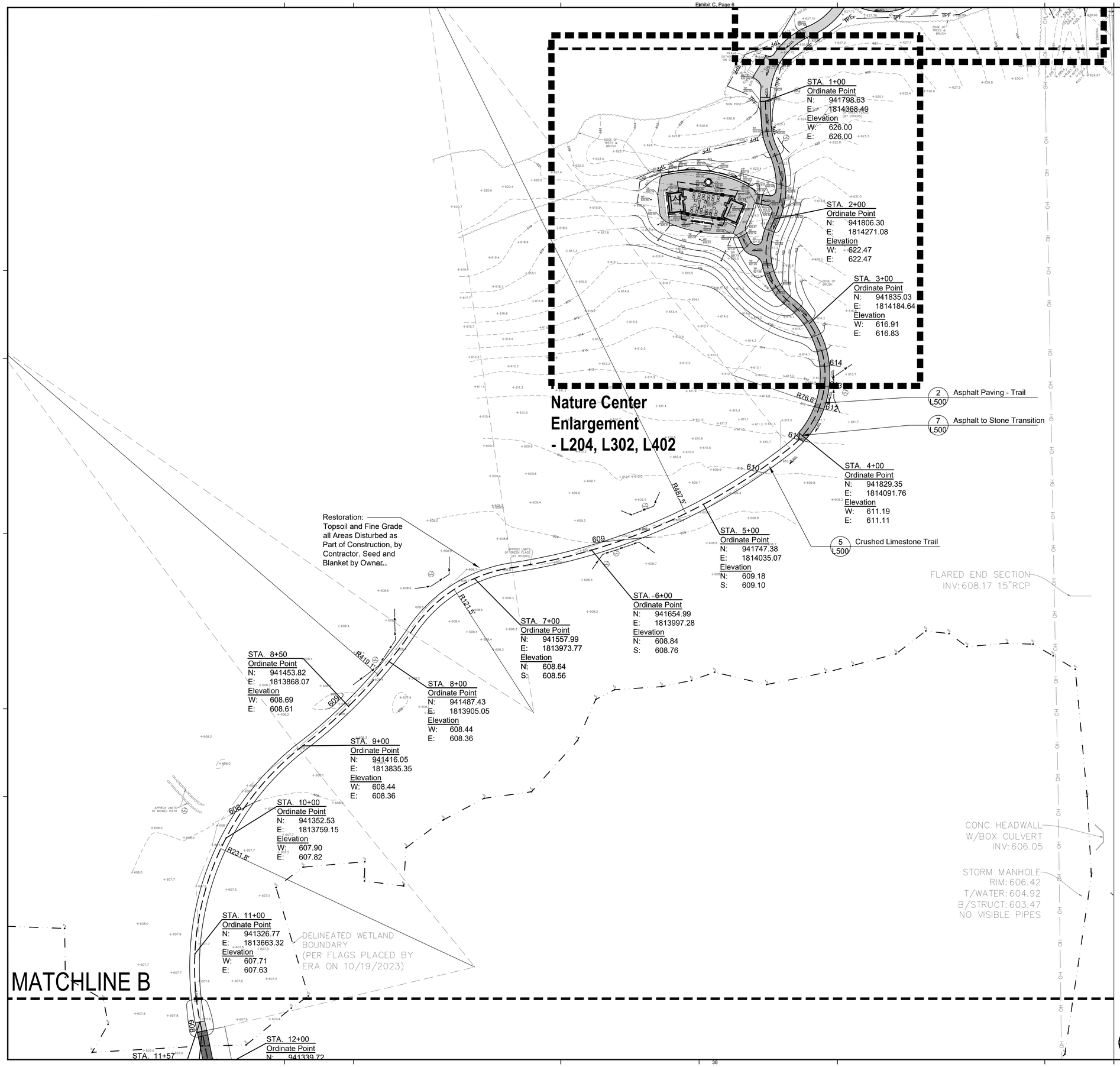

GENERAL NOTES: LAYOUT

1. See Sheet L200 for Notes

REFERENCED SPECIFICATIONS AND CODES

1. See Sheet L200 for Notes

GENERAL NOTES: DIMENSION

1. See Sheet L200 for Dimension Notes

GENERAL NOTES: GRADING

1. See Sheet L200 for Grading Notes

LEGEND

- Centerline of Trail/Boardwalk
- Asphalt Paving
- Concrete Paving
- Crushed Limestone Surfacing
- Gravel Surfacing
- Boardwalk
- EJ — Concrete Expansion Joints
- CL — Construction Limits / Construction Fence

North

SCALE: 1" = 30'-0"

0 15' 30' 60' 90'

Kluber Architects + Engineers
Kluber, Inc.
Aurora, Illinois 60506
tel: 630.406.1213
Bloomington, Illinois 61704
tel: 309.430.6460
www.kluberinc.com

uplandDesign ltd
Landscape Architecture & Park Planning
12250 W. 159th St., Crestwood, Illinois 60418
24042 Lockport St., Plainfield, Illinois 60544
815-254-0091 www.uplandDesign.com
IL License 060-007797 Upland #1191

SUBAT NATURE CENTER

KENDALL CO FOREST PRESERVE
ELDAMAIN RD
PLANO, IL 60545

CIVIL ENGINEER
Engineering Resource Associates
3s701 West Avenue, Suite 150
Warrenville, Illinois 60555
IL License 184-001186

ISSUED	
04/11/24	BID DOCUMENTS

JOB NO.	23-429-1495
DRAWN	EM
CHECKED	MK
APPROVED	MK

SHEET TITLE

LAYOUT, DIMENSION, & GRADING PLAN - NORTH TRAIL

SHEET NUMBER

L201

NOTE: SCALES DEPICTED ON THIS DRAWING ARE NOT CORRECT UNLESS PLOTTED SHEET SIZE IS 30 X 42 INCHES.

Copyright © 2024 KLUBER, INC.

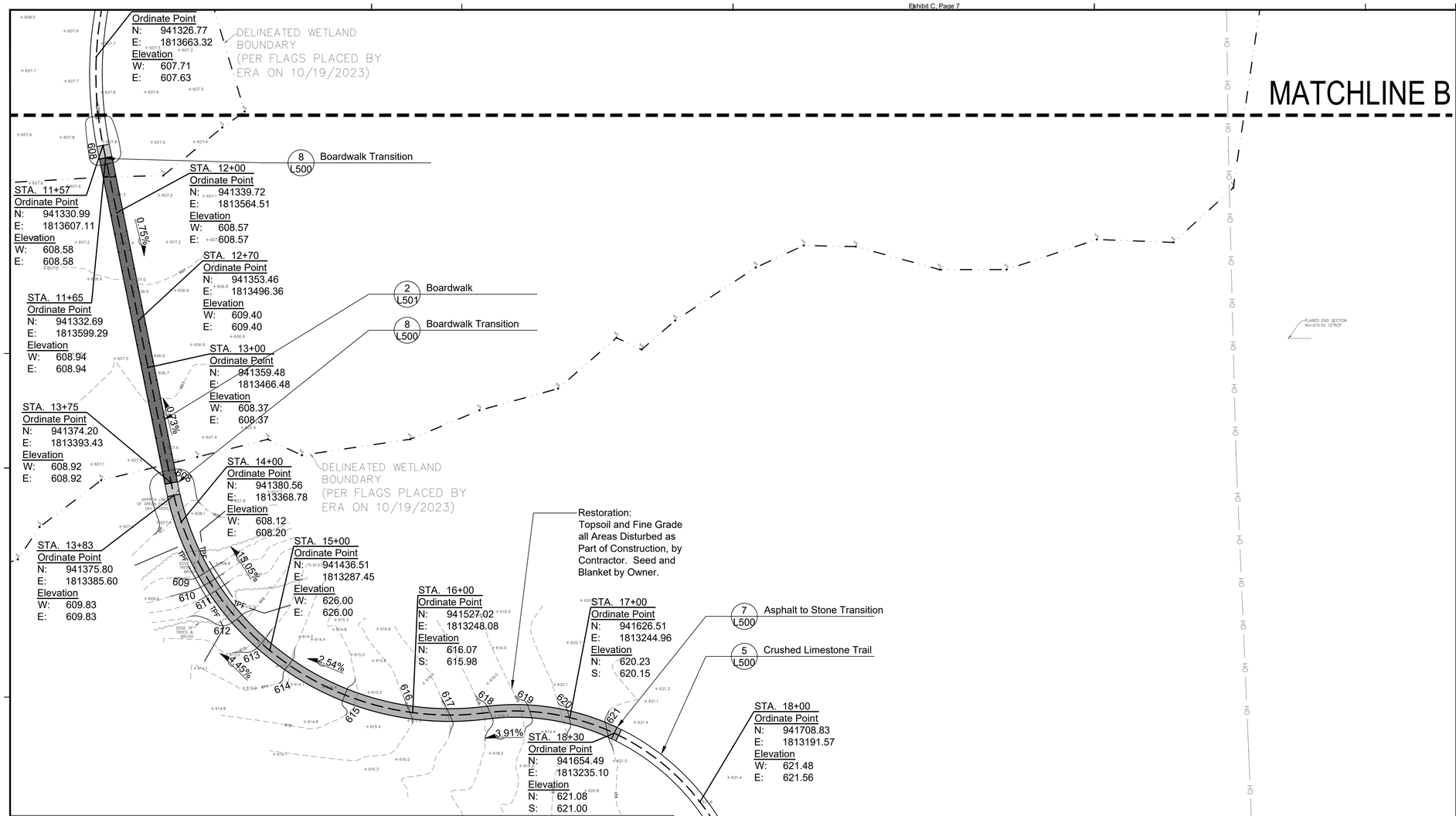

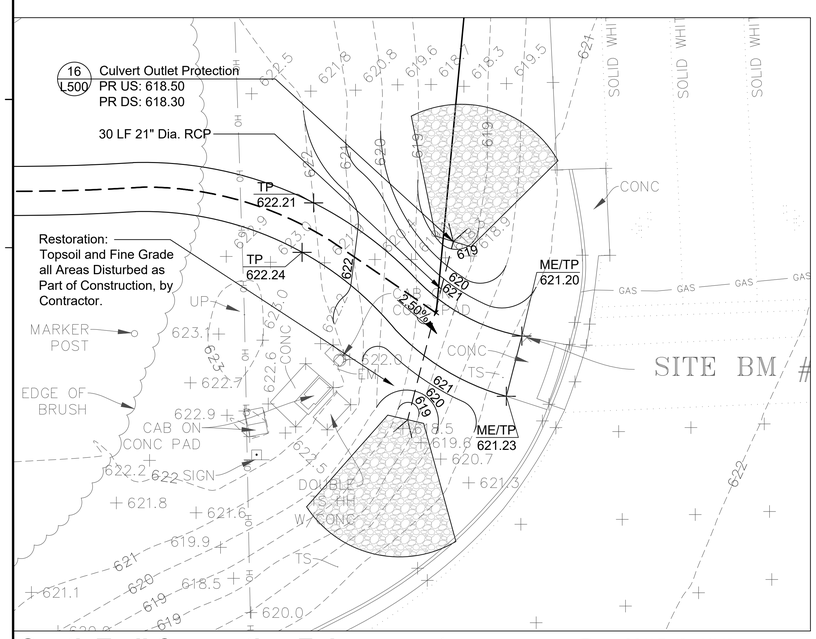

South Trail Connection Enlargement

North

SCALE: 1" = 30'-0"

0 15' 30' 60' 90'

GENERAL NOTES: LAYOUT

1. See Sheet L200 for Notes

REFERENCED SPECIFICATIONS AND CODES

1. See Sheet L200 for Notes

GENERAL NOTES: DIMENSION

1. See Sheet L200 for Dimension Notes

GENERAL NOTES: GRADING

1. See Sheet L200 for Grading Notes

LEGEND

- Asphalt Paving
- Concrete Paving
- Crushed Limestone Surfacing
- Gravel Surfacing
- Boardwalk
- EJ Concrete Expansion Joints
- CL Construction Limits / Construction Fence

North

SCALE: 1" = 30'-0"

0 15' 30' 60' 90'

Kluber Architects + Engineers

Kluber, Inc.
Aurora, Illinois 60506
tel: 630.406.1213
Bloomington, Illinois 61704
tel: 309.430.6460
www.kluberinc.com

uplandDesign ltd
Landscape Architecture & Park Planning
12306 W. Rt. 173, Chapin, Illinois 62628
24042 Lockport St., Plainfield, Illinois 60544
815-254-0091 www.uplandDesign.com
IL License 060-007797 Upland #1191

CIVIL ENGINEER
Engineering Resource Associates
3s701 West Avenue, Suite 150
Warrenville, Illinois 60555
IL License 184-001186

SUBAT NATURE CENTER

KENDALL CO FOREST PRESERVE
ELDAMAIN RD
PLANO, IL 60545

ISSUED	
04/11/24	BID DOCUMENTS

JOB NO.	23-429-1495
DRAWN	EM
CHECKED	MK
APPROVED	MK

SHEET TITLE

LAYOUT, DIMENSION, & GRADING PLAN - SOUTH TRAIL

SHEET NUMBER

L202

NOTE: SCALES DEPICTED ON THIS DRAWING ARE NOT CORRECT UNLESS PLOTTED SHEET SIZE IS 30 X 42 INCHES.

Copyright © 2024 KLUBER, INC.

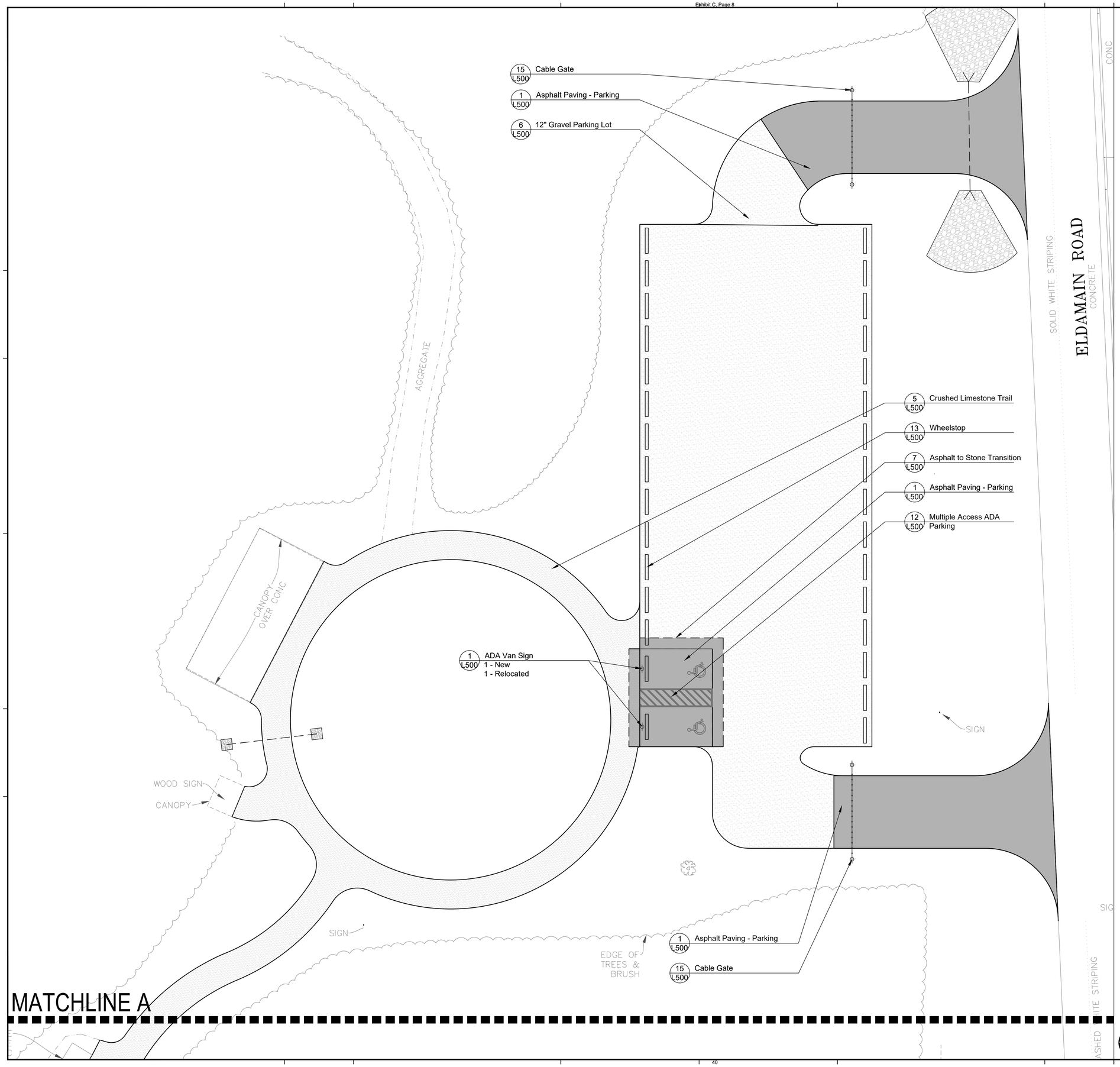

GENERAL NOTES: LAYOUT

1. See Sheet L200 for Layout Notes.

REFERENCED SPECIFICATIONS AND CODES

1. See Sheet L200 for Referenced Specification and Codes.

LEGEND

- Asphalt Paving
- Concrete Paving
- Crushed Limestone Surfacing
- Gravel Surfacing
- Boardwalk
- EJ — Concrete Expansion Joints
- CL — Construction Limits / Construction Fence

North

SCALE: 1" = 10'-0"

0 5' 10' 20' 30'

Kluber Architects + Engineers

Kluber, Inc.
Aurora, Illinois 60506
tel: 630.406.1213
Bloomington, Illinois 61704
tel: 309.430.6460
www.kluberinc.com

uplandDesign ltd
Landscape Architecture & Park Planning
12250 W. Rt. 173, Crystal Lake, Illinois 60012
24042 Lockport St., Plainfield, Illinois 60544
815-254-0091 www.uplandDesign.com
IL License 060-007797 Upland #1191

SUBAT NATURE CENTER

KENDALL CO FOREST PRESERVE
ELDAMAIN RD
PLANO, IL 60545

CIVIL ENGINEER
Engineering Resource Associates
3s701 West Avenue, Suite 150
Warrenville, Illinois 60555
IL License 184-001186

ISSUED	
04/17/24	BID DOCUMENTS

JOB NO.	23-429-1495
DRAWN	EM
CHECKED	MK
APPROVED	MK

SHEET TITLE

LAYOUT PLAN - PARKING LOT ENLARGEMENT

SHEET NUMBER

L203

NOTE: SCALES DEPICTED ON THIS DRAWING ARE NOT CORRECT UNLESS PLOTTED SHEET SIZE IS 30 X 42 INCHES.

Copyright © 2024 KLUBER, INC.

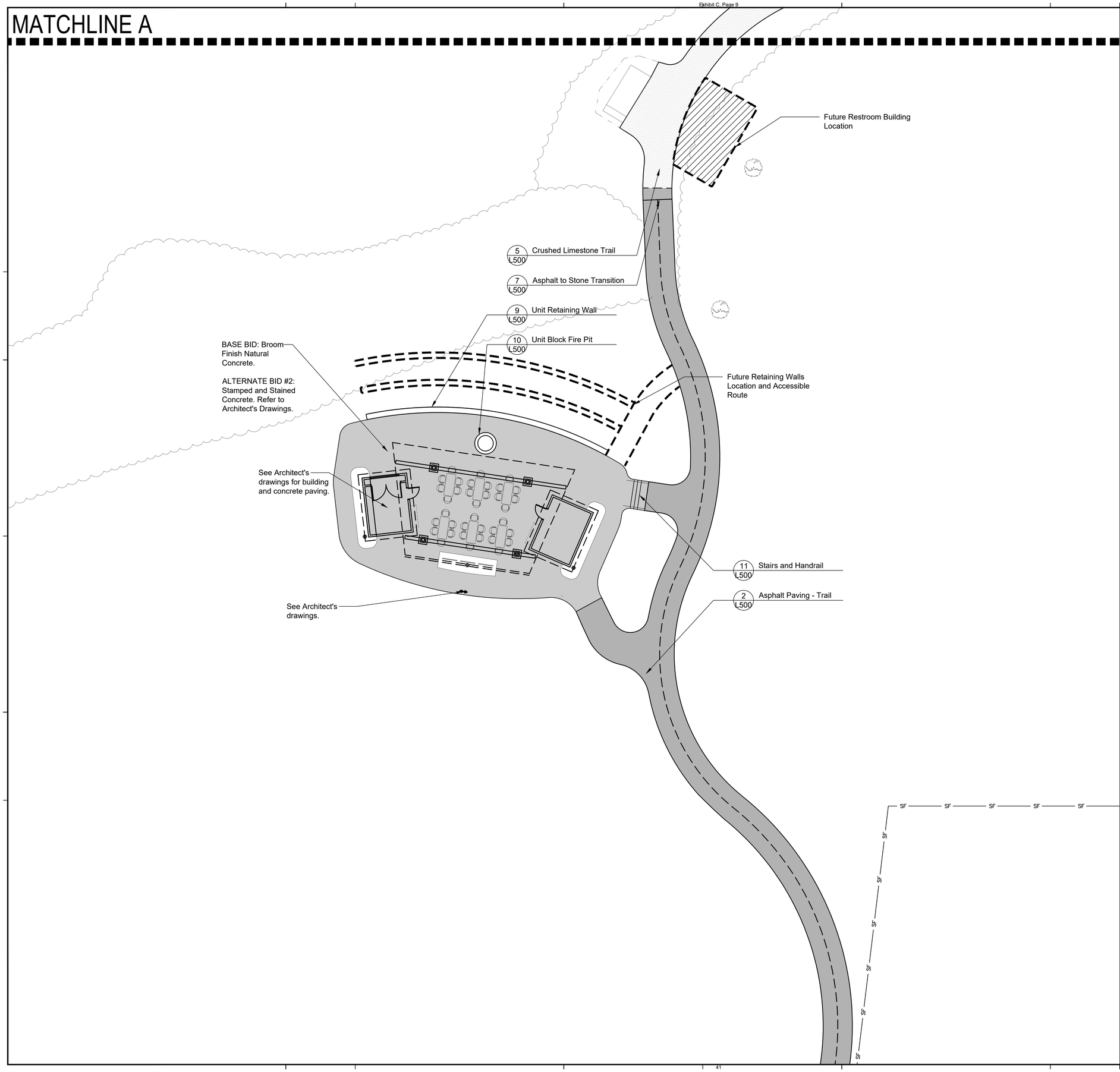

GENERAL NOTES: LAYOUT

1. See Sheet L200 for Notes

REFERENCED SPECIFICATIONS AND CODES

1. See Sheet L200 for Notes

LEGEND

- Asphalt Paving
- Concrete Paving
- Crushed Limestone Surfacing
- Gravel Surfacing
- Boardwalk
- EJ — Concrete Expansion Joints
- CL — Construction Limits / Construction Fence

North

SCALE: 1" = 10'-0"

0 5' 10' 20' 30'

Kluber Architects + Engineers

Kluber, Inc.
Aurora, Illinois 60506
tel: 630.406.1213
Bloomington, Illinois 61704
tel: 309.430.6460
www.kluberinc.com

uplandDesign ltd
Landscape Architecture & Park Planning
12250 W. 159th St., Crestwood, Illinois 60418
24042 Lockport St., Plainfield, Illinois 60544
815-254-0091 www.uplandDesign.com
IL License 060-007797 Upland #1191

SUBAT NATURE CENTER

KENDALL CO FOREST PRESERVE
ELDAMAIN RD
PLANO, IL 60545

CIVIL ENGINEER
Engineering Resource Associates
3s701 West Avenue, Suite 150
Warrenville, Illinois 60555
IL License 184-001186

ISSUED	
04/11/24	BID DOCUMENTS

JOB NO.	23-429-1495
DRAWN	EM
CHECKED	MK
APPROVED	MK

SHEET TITLE

LAYOUT PLAN - NATURE CENTER ENLARGEMENT

SHEET NUMBER

L204

NOTE: SCALES DEPICTED ON THIS DRAWING ARE NOT CORRECT UNLESS PLOTTED SHEET SIZE IS 30 X 42 INCHES.

Copyright © 2024 KLUBER, INC.

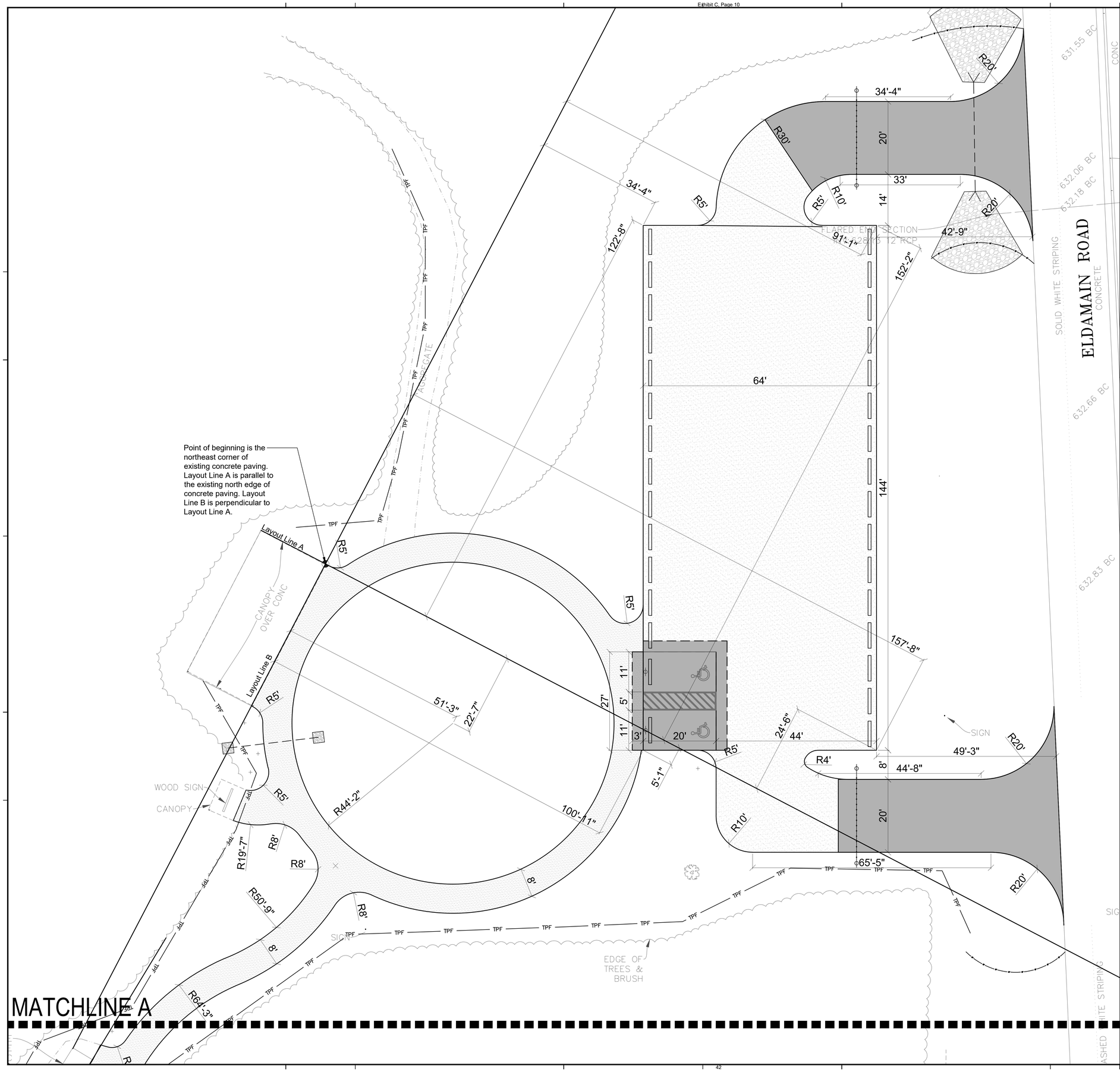

GENERAL NOTES: DIMENSION

1. See Sheet L200 for Dimension Notes

LEGEND

- Asphalt Paving
- Concrete Paving
- Crushed Limestone Surfacing
- Gravel Surfacing
- Boardwalk
- EJ — Concrete Expansion Joints
- CL — Construction Limits / Construction Fence

North

SCALE: 1" = 10'-0"

0 5' 10' 20' 30'

Kluber Architects + Engineers

Kluber, Inc.
Aurora, Illinois 60506
tel: 630.406.1213
Bloomington, Illinois 61704
tel: 309.430.6460
www.kluberinc.com

uplandDesign ltd
Landscape Architecture & Park Planning
12351 W. Rt. 173, Chapin, Illinois 62628
24042 Lockport St., Plainfield, Illinois 60544
815-254-0091 www.uplandDesign.com
IL License 060-007797 Upland #1191

CIVIL ENGINEER
Engineering Resource Associates
3s701 West Avenue, Suite 150
Warrenville, Illinois 60555
IL License 184-001186

SUBAT NATURE CENTER

KENDALL CO FOREST PRESERVE
ELDAMAIN RD
PLANO, IL 60545

ISSUED	
04/17/24	BID DOCUMENTS

JOB NO.	23-429-1495
DRAWN	EM
CHECKED	MK
APPROVED	MK

SHEET TITLE

DIMENSION PLAN - PARKING LOT ENLARGEMENT

SHEET NUMBER

L301

NOTE: SCALES DEPICTED ON THIS DRAWING ARE NOT CORRECT UNLESS PLOTTED SHEET SIZE IS 30 X 42 INCHES.

Copyright © 2024 KLUBER, INC.

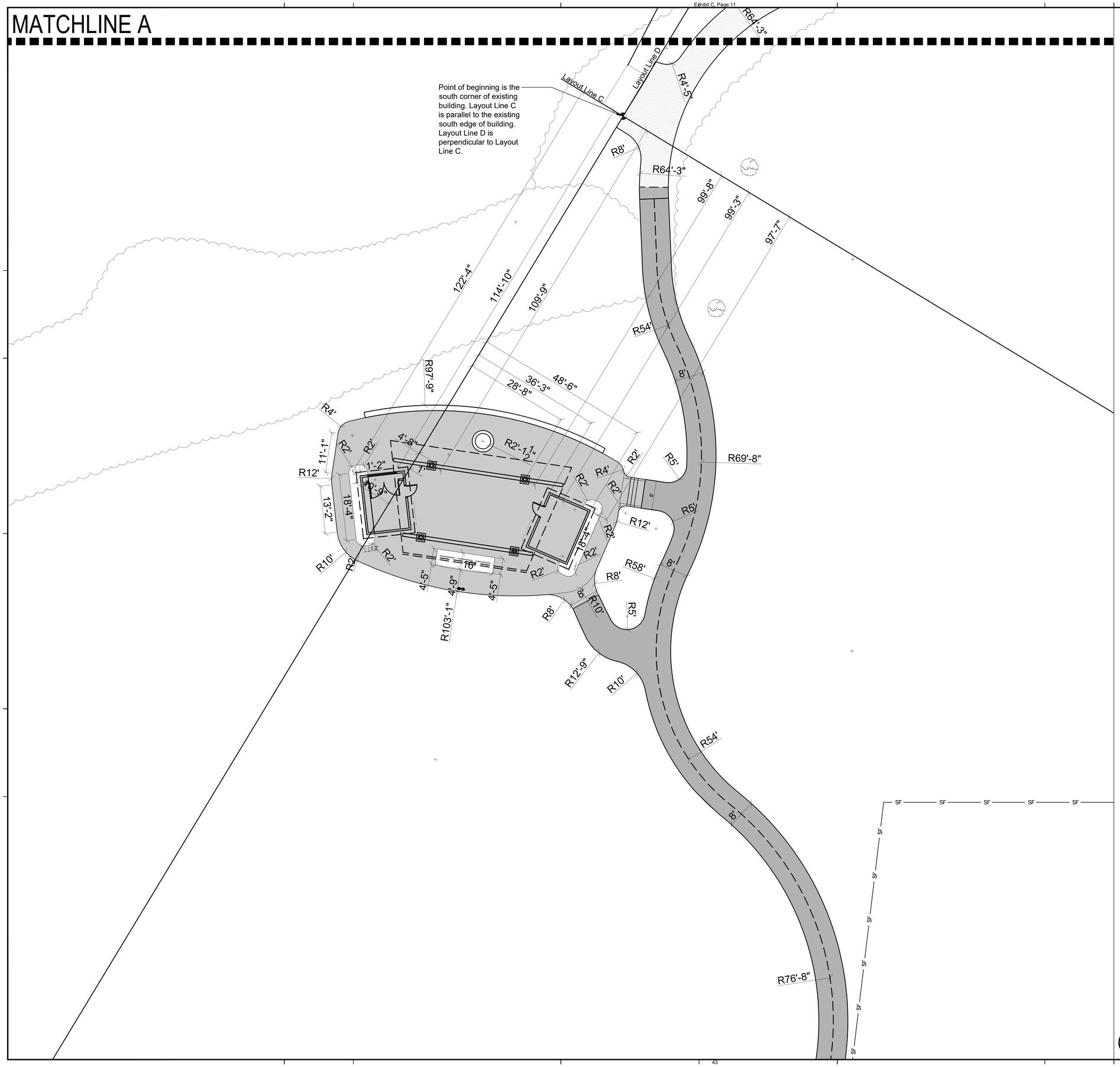

GENERAL NOTES: DIMENSION

1. See Sheet L200 for Dimension Notes

Kluber Architects + Engineers

Kluber, Inc.
Aurora, Illinois 60506
tel: 630.406.1213
Bloomington, Illinois 61704
tel: 309.430.6460
www.kluberinc.com

uplandDesign ltd
Landscape Architecture & Park Planning
12250 W. Rt. 176, Crystal Lake, Illinois 60014
24042 Lockport St., Plainfield, Illinois 60544
815-254-0091 www.uplandDesign.com
IL License 060-007797 Upland #1191

CIVIL ENGINEER
Engineering Resource Associates
3s701 West Avenue, Suite 150
Warrenville, Illinois 60555
IL License 184-001186

SUBAT NATURE CENTER

KENDALL CO.FOREST PRESERVE
ELDAMAIN RD
PLANO, IL 60545

ISSUED	
04/11/24	BID DOCUMENTS

JOB NO.	23-429-1495
DRAWN	EM
CHECKED	MK
APPROVED	MK

SHEET TITLE

DIMENSION PLAN - NATURE CENTER ENLARGEMENT

SHEET NUMBER

L302

NOTE: SCALES DEPICTED ON THIS DRAWING ARE NOT CORRECT UNLESS PLOTTED SHEET SIZE IS 30 X 42 INCHES.

Copyright © 2024 KLUBER, INC.

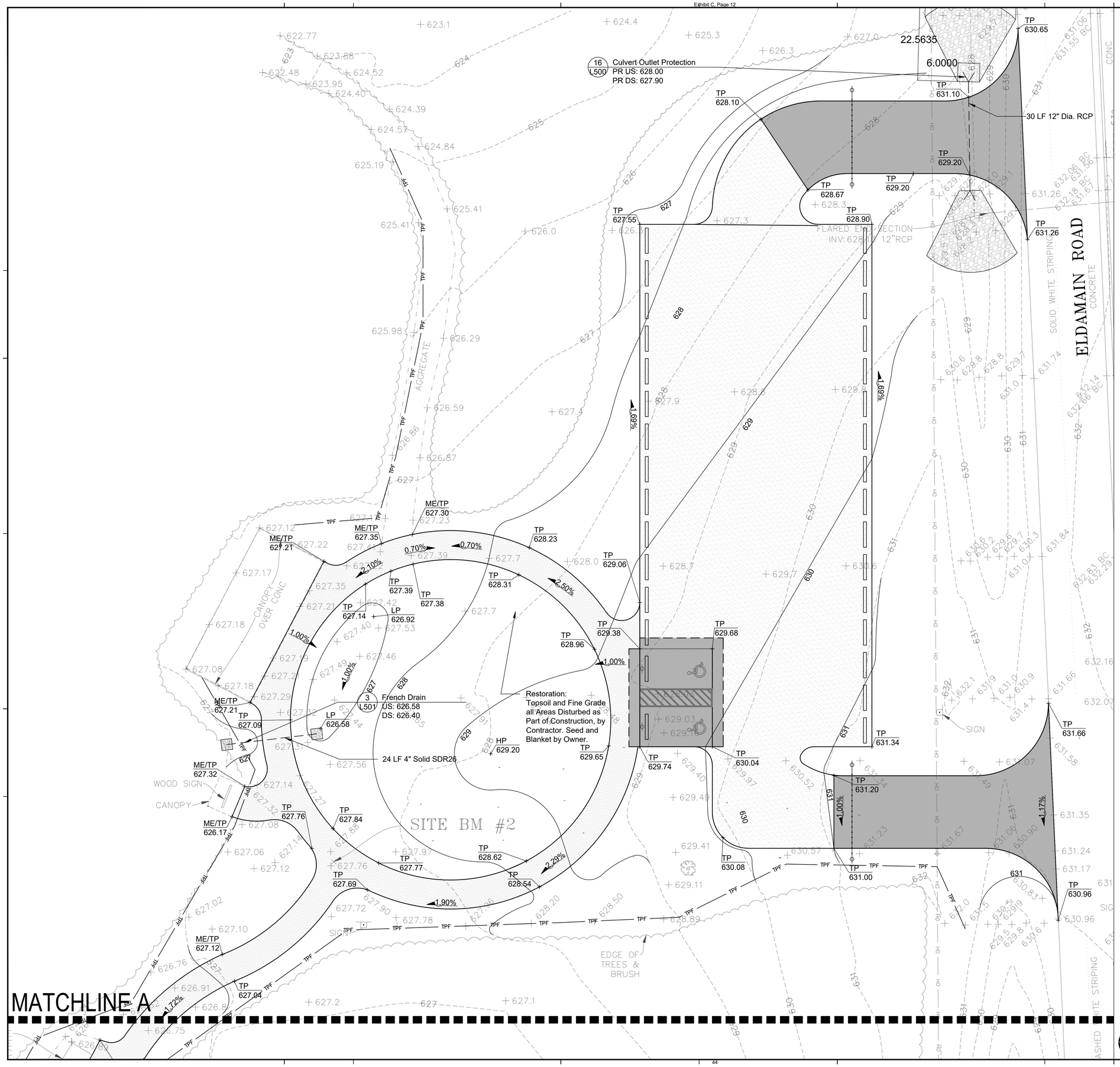

GENERAL NOTES: GRADING

1. See Sheet L200 for Grading Notes.

LEGEND

681	Existing Contour Line
681	Proposed Contour Line
+ 685.35	Existing Spot Elevation
689.66	Proposed Spot Elevation
2%	Drainage Flow Direction
CL	Construction Limits / Construction Fence

INDEX OF ACRONYMS AND ABBREVIATIONS

HP - High Point

INV - Pipe Invert Elevation

LP - Low Point

ME - Match Existing Elevation

RIM - Top of Rim Elevation

TC - Top of Curb

TP - Top of Pavement

TW - Top of Wall

SCALE: 1" = 10'-0"

0 5' 10' 20' 30'

Kluber
Architects + Engineers

Kluber, Inc.
Aurora, Illinois 60506
tel: 630.406.1213
Bloomington, Illinois 61704
tel: 309.430.6460
www.kluberinc.com

uplandDesign ltd
Landscape Architecture & Park Planning
1220 Lake St., Oregon, Illinois 61061
24042 Lockport St., Plainfield, Illinois 60544
815-254-0091 www.uplandDesign.com
IL License 060-007797 Upland #1191

SUBAT NATURE CENTER

KENDALL CO FOREST PRESERVE
ELDAMAIN RD
PLANO, IL 60545

CIVIL ENGINEER
Engineering Resource Associates
3s701 West Avenue, Suite 150
Warrenville, Illinois 60555
IL License 184-001186

ISSUED
04/17/24 BID DOCUMENTS

JOB NO.	23-429-1495
DRAWN	EM
CHECKED	MK
APPROVED	MK

SHEET TITLE

GRADING PLAN - PARKING LOT ENLARGEMENT

SHEET NUMBER

L401

NOTE: SCALES DEPICTED ON THIS DRAWING ARE NOT CORRECT UNLESS PLOTTED SHEET SIZE IS 30 X 42 INCHES.

Copyright © 2024 KLUBER, INC.

MATCHLINE A

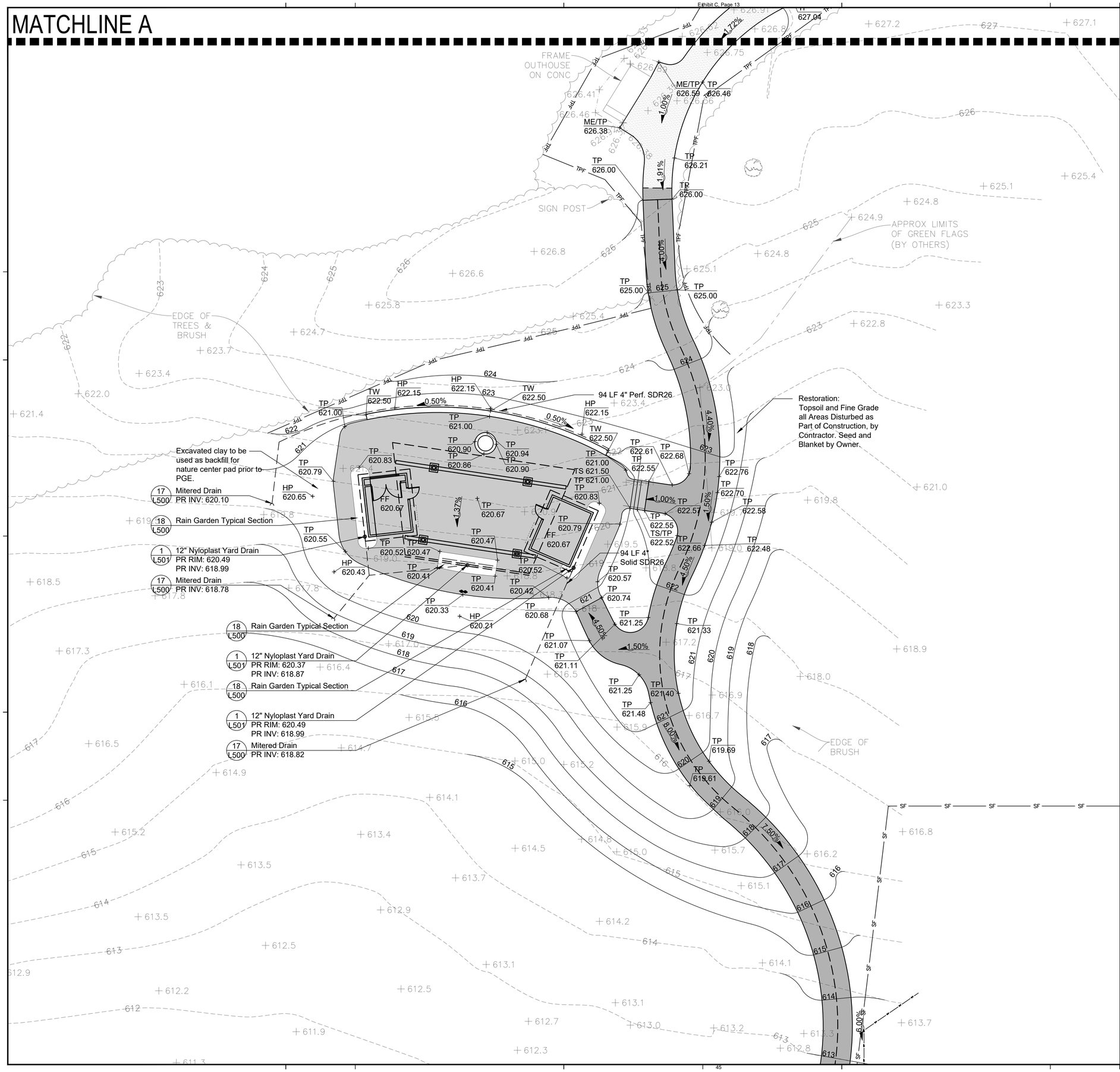

GENERAL NOTES: GRADING

1. See Sheet L200 for Grading Notes

LEGEND

681	Existing Contour Line
681	Proposed Contour Line
+ 685.35	Existing Spot Elevation
+ 689.66	Proposed Spot Elevation
2%	Drainage Flow Direction
CL	Construction Limits / Construction Fence

INDEX OF ACRONYMS AND ABBREVIATIONS

HP - High Point
INV - Pipe Invert Elevation
LP - Low Point
ME - Match Existing Elevation
RIM - Top of Rim Elevation
TC - Top of Curb
TP - Top of Pavement
TW - Top of Wall

North

SCALE: 1" = 10'-0"
0 5' 10' 20' 30'

Kluber Architects + Engineers

Kluber, Inc.
Aurora, Illinois 60506
tel: 630.406.1213
Bloomington, Illinois 61704
tel: 309.430.6460
www.kluberinc.com

uplandDesign ltd
Landscape Architecture & Park Planning
1228 W. Main St., Crystal Lake, Illinois 60014
24042 Lockport St., Plainfield, Illinois 60544
815-254-0091 www.uplandDesign.com
IL License 060-007797 Upland #1191

SUBAT NATURE CENTER
KENDALL CO FOREST PRESERVE
ELDAMAIN RD
PLANO, IL 60545

CIVIL ENGINEER
Engineering Resource Associates
3s701 West Avenue, Suite 150
Warrenville, Illinois 60555
IL License 184-001186

ISSUED	
04/17/24	BID DOCUMENTS

JOB NO.	23-429-1495
DRAWN	EM
CHECKED	MK
APPROVED	MK

SHEET TITLE
GRADING PLAN - NATURE CENTER ENLARGEMENT

SHEET NUMBER
L402

NOTE: SCALES DEPICTED ON THIS DRAWING ARE NOT CORRECT UNLESS PLOTTED SHEET SIZE IS 30 X 42 INCHES.

Copyright © 2024 KLUBER, INC.

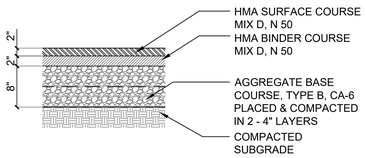

1 Asphalt Paving - Parking

SCALE: 1"=1'-0" detail drawing sorted.dwg

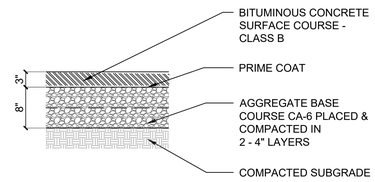

2 Asphalt Paving - Trail

SCALE: 1"=1'-0" d-asph_trail _12.dwg

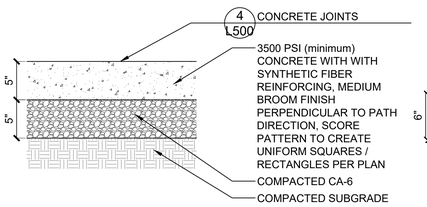

3 Concrete Paving

SCALE: 1 1/2" = 1'-0" d-conc pav-5_8

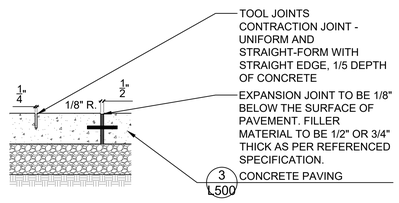

NOTES:
1. JOINTS PLAN TAKES PRIORITY OVER NOTES EXCEPT FOR MAXIMUM SPACING.
2. CONTRACTION JOINTS TO BE PLACED 10' O.C. MAXIMUM
3. EXPANSION JOINTS TO BE PLACED 30' O.C. MAXIMUM
4. PLACE EXPANSION JOINTS BETWEEN NEW CONCRETE POURS AND INSTALL 8" EPOXY COATED BARS, 12" O.C.
5. CURB JOINTS TO MATCH CONCRETE PAVING WHERE APPLICABLE
6. INSTALL SMOOTH DOWELS AT EXPANSION JOINTS
7. NO 'CALIFORNIA JOINTS'

4 Concrete Joints

SCALE: 1 1/2"=1'-0" d-conc_joints_8.dwg

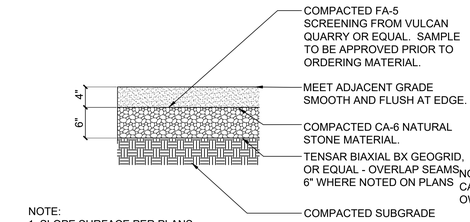

NOTE:
1. SLOPE SURFACE PER PLANS.
2. MAXIMUM CROSS SLOPE TO BE 1.5% MAXIMUM.
3. GEOTEXTILE PER BID QUANTITY - OR LESS IF NOT APPROVED BY OWNER'S REP; PLACE AT AREAS OF UNSUITABLE SUBGRADE.
4. COMPOSITION TO BE 90% MINIMUM.

5 Crushed Limestone Trail

SCALE: 1" = 1'-0" Limestone-FA5 A

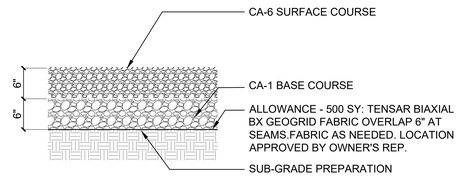

6 12" Gravel Parking Lot

SCALE: 1"=1'-0" 12 gravel CA6_1_12

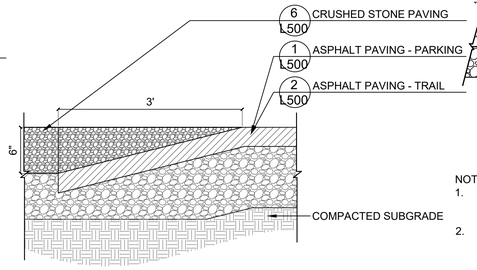

7 Asphalt to Stone Transition

SCALE: 1 1/2" = 1'-0" d-asph-gravel transition_8

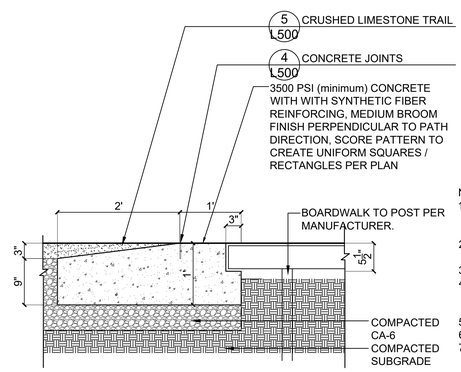

8 Boardwalk Tranisition

SCALE: Not to Scale CRing-FirePit

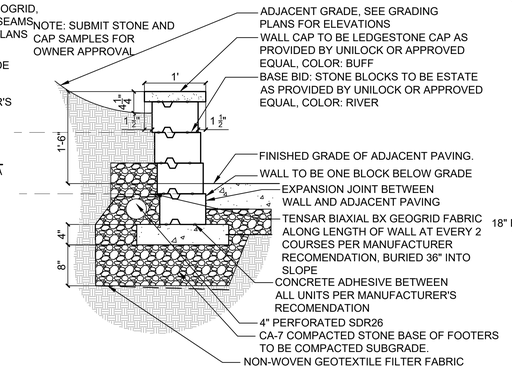

9 Unit Retaining Wall

SCALE: Not to Scale d-limestone seat wall-2 sides

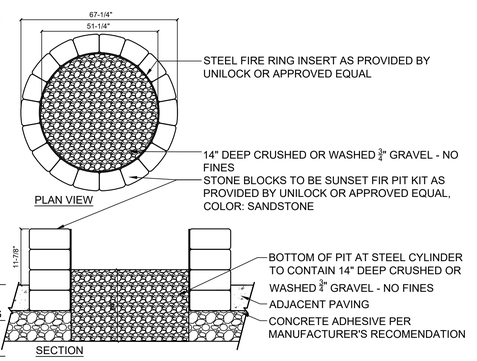

10 Unit Block Fire Pit

SCALE: Not to Scale CRing-FirePit

NOTE:
1. CONTRACTOR TO PROVIDE SHOP DRAWINGS TO OWNER'S REPRESENTATIVE FOR REVIEW APPROVAL PRIOR TO CONSTRUCTION.
2. TOP OF STAIR TREAD ELEVATIONS AS SHOWN ON GRADING PLAN.

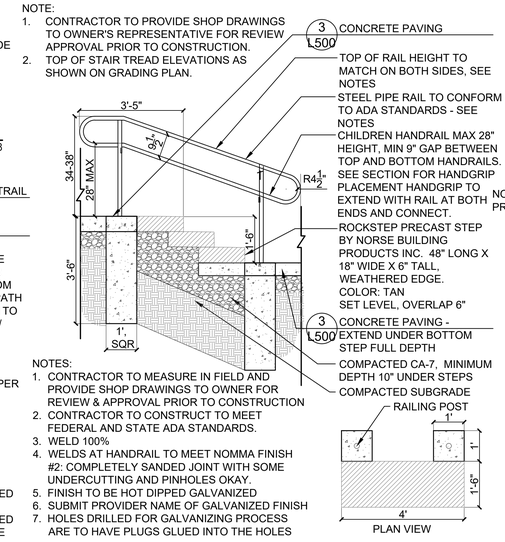

NOTES:
1. CONTRACTOR TO MEASURE IN FIELD AND PROVIDE SHOP DRAWINGS TO OWNER FOR REVIEW & APPROVAL PRIOR TO CONSTRUCTION
2. CONTRACTOR TO CONSTRUCT TO MEET FEDERAL AND STATE ADA STANDARDS.
3. WELD 100%
4. WELDS AT HANDRAIL TO MEET NOMMA FINISH #2: COMPLETELY SANDED JOINT WITH SOME UNDERCUTTING AND PINHOLES OKAY.
5. FINISH TO BE HOT DIPPED GALVANIZED
6. SUBMIT PROVIDER NAME OF GALVANIZED FINISH
7. HOLES DRILLED FOR GALVANIZING PROCESS ARE TO HAVE PLUGS GLUED INTO THE HOLES

11 Stairs and Handrail

SCALE: 1" = 1/2" d-stairs_hillside

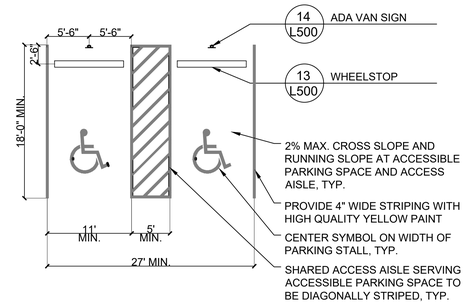

12 Multiple Access ADA Parking

SCALE: 1/8"=1'-0" d-ADA Parking_96

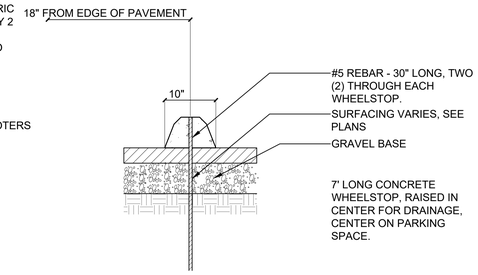

13 Wheelstop

SCALE: 1"=1'-0" wheelstop_1_12

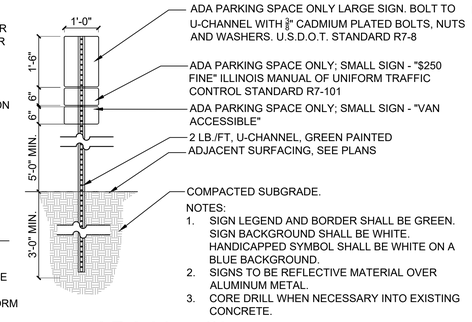

NOTES:
1. SIGN LEGEND AND BORDER SHALL BE GREEN. SIGN BACKGROUND SHALL BE WHITE. HANDICAPPED SYMBOL SHALL BE WHITE ON A BLUE BACKGROUND.
2. SIGNS TO BE REFLECTIVE MATERIAL OVER ALUMINUM METAL.
3. CORE DRILL WHEN NECESSARY INTO EXISTING CONCRETE.

14 ADA Van Sign

SCALE: N.T.S. d-sign_ada-van-metal_12.dwg

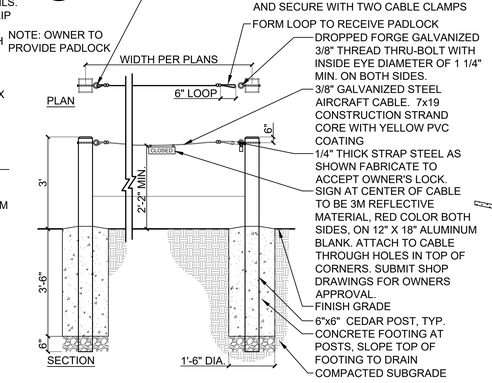

15 Cable Gate

SCALE: 1/2"=1'-0" d-cable gate_24

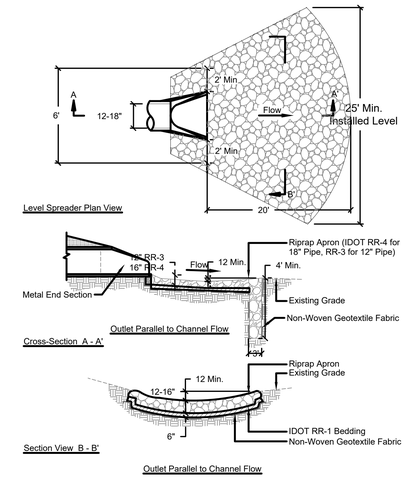

16 Culvert Outlet Protection

(Not to Scale)

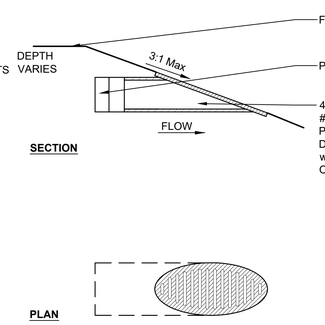

17 Mitered Drain

SCALE: 1 1/2"=1'-0" d-mitered drain_8

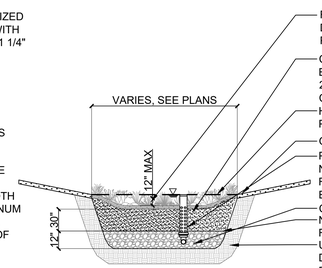

18 Rain Garden Typical Section

SCALE: NTS d-plant_rain garden_48.dwg

Kluber Architects + Engineers
Kluber, Inc.
Aurora, Illinois 60506
tel: 630.406.1213
Bloomington, Illinois 61704
tel: 309.430.6460
www.kluberinc.com

uplandDesign ltd
Landscape Architecture & Park Planning
12250 W. Cedar Rd., Cedar Lake, IN 46303
24042 Lockport St., Plainfield, Illinois 60544
815-254-0091 www.uplandDesign.com
IL License 060-007797 Upland #1191

SUBATI NATURE CENTER
KENDALL CO FOREST PRESERVE
ELDAMAIN RD
PLANO, IL 60545

CIVIL ENGINEER
Engineering Resource Associates
3s701 West Avenue, Suite 150
Warrenville, Illinois 60555
IL License 184-001186

04/11/24	BID DOCUMENTS
10/04/23	ISSUED

JOB NO.	23-429-1495
DRAWN	EM
CHECKED	MK
APPROVED	MK

SHEET TITLE
CONSTRUCTION DETAILS

SHEET NUMBER
L500

NOTE: SCALES DEPICTED ON THIS DRAWING ARE NOT CORRECT UNLESS PLOTTED SHEET SIZE IS 30 X 42 INCHES.

Copyright © 2024 KLUBER, INC.

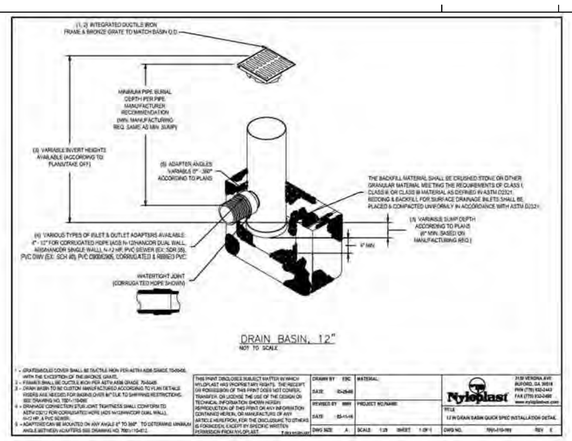

1 12" Nyloplast Yard Drain
N.T.S.

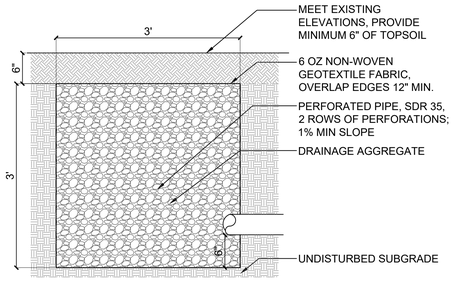

3 French Drain
SCALE: 1" = 1'-0"

d-util_french drain_12.dwg

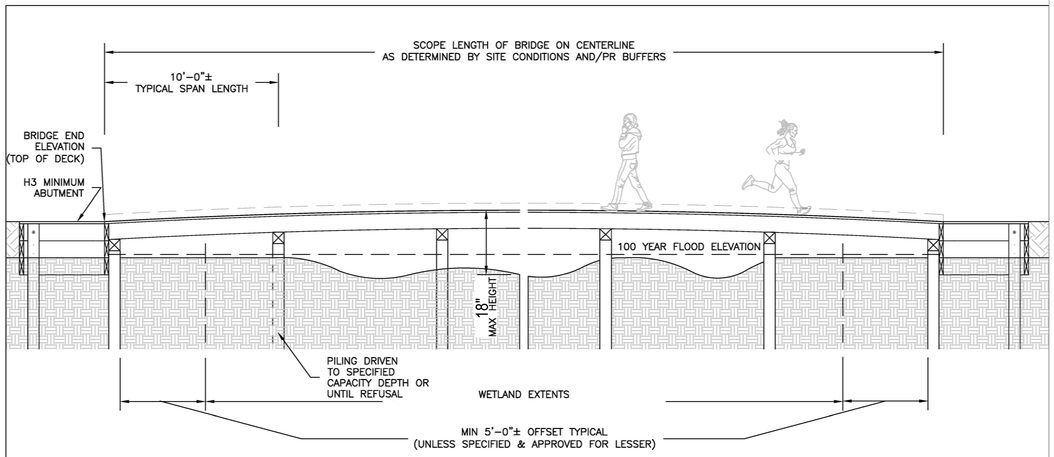

1 ELEVATION VIEW
SCALE: NTS

GENERAL NOTES
1. DRAWING IS CONCEPTUAL IN NATURE AND IS NOT TO BE USED FOR CONSTRUCTION PURPOSES.
2. SITE INFORMATION IS GENERIC TO ILLUSTRATE GENERALIZED CONDITIONS.
3. LOW CHORD TO BE A MINIMUM OF 12 INCHES CLEAR OF 100 YEAR FLOOD ELEVATION REQUIRED.
4. GRADING & RIP RAP DESIGN & INSTALLATION BY CONTRACTOR NO STEEPER THAN 2:1 GRADING WITH AT LEAST 6" CLEAR OF THE BOTTOM OF PILE CAP IS PREFERRED.
5. MINIMUM OF 5' OFFSET FROM EASEMENTS, FLOW, EXTENTS, ENVIRONMENTAL BUFFERS, OR SIMILAR RECOMMENDED
6. TIMBER PILING INSTALLED TO A DEPTH OF 10' OR UNTIL REFUSAL IS INCLUDED IN THE BASE BID. IF ALTERNATE METHODS (DRILLING) OR ADDITIONAL DEPTH (PAST 10') ARE NEEDED, TIME AND EXPENSES WILL BE COVERED/ SEE SECTION 1.2 OF BRIDGE SPECIFICATIONS.
7. BRIDGE SLOPE NOT TO EXCEED 4.5% FOR A CONTINUOUS PATH OR 7.5% IN AN ADA RAMP & LANDING CONFIGURATION

2 Boardwalk
SCALE: 1" = 1'-0"

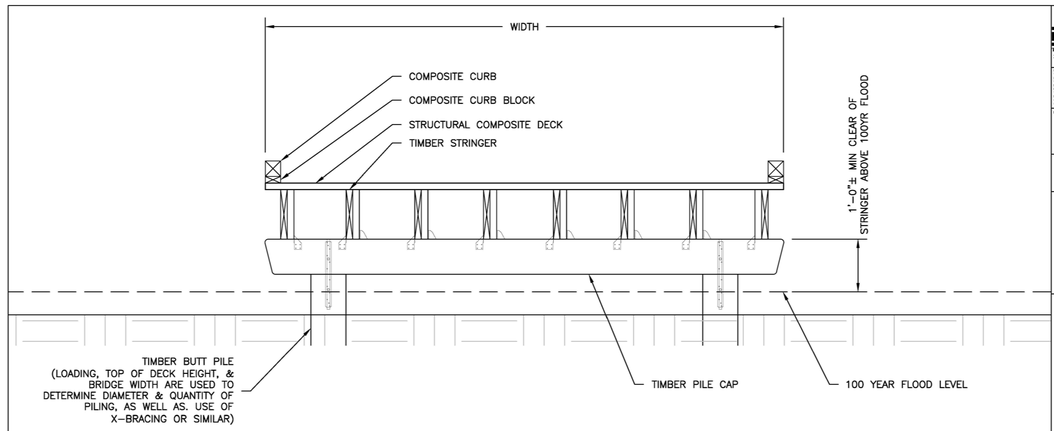

GENERAL NOTES
1. DRAWING IS CONCEPTUAL IN NATURE AND IS NOT TO BE USED FOR CONSTRUCTION PURPOSES.
2. SITE INFORMATION IS GENERIC TO ILLUSTRATE GENERALIZED CONDITIONS.
3. TIMBER PILING INSTALLED TO A DEPTH OF 10' OR UNTIL REFUSAL IS INCLUDED IN THE BASE BID. IF ALTERNATE METHODS (DRILLING) OR ADDITIONAL DEPTH (PAST 10') ARE NEEDED, TIME AND EXPENSES WILL BE COVERED/ SEE SECTION 1.2 OF BRIDGE SPECIFICATIONS.
4. LOW CHORD TO BE A MINIMUM OF 12 INCHES CLEAR OF 100 YEAR FLOOD ELEVATION REQUIRED.

1 SECTION- REPETITIVE BENT
SCALE: NTS

YORK BRIDGE CONCEPTS
THE PREMIER TIMBER BRIDGE COMPANY
2423 BRUNELLO TRACE LUTZ, FL 33558
WWW.YBC.COM 800.226.4178

THIS DOCUMENT IS THE PROPERTY OF YORK BRIDGE CONCEPTS AND THE USE OF OR COPY OF THIS DOCUMENT IS PROHIBITED EXCEPT WITH THE EXPRESSED WRITTEN PERMISSION OF YORK BRIDGE CONCEPTS. THE INFORMATION ON THIS SHEET, AND ALL SUPPLEMENTARY INFORMATION, IS TO BE KEPT CONFIDENTIAL UNLESS OTHERWISE PERMITTED. ANY RIGHTS EX. GRANTED ARE NON-TRANSFERABLE TO THIRD PARTIES WITHOUT THE PRIOR EXPRESSED WRITTEN CONSENT OF YORK BRIDGE CONCEPTS.

CLIENT/CONTRACTOR:

ZEYN UZMAN, PE
305 CHARLESTON GREENE, MALVERN, PA 19355
ENGINEER OF RECORD

PROJECT INFORMATION:
SUBAT FOREST PRESERVE
TIMBER PEDESTRIAN BRIDGE
LOADING: 90 PSF OR 2 TON (L/360)
WIND: N/A
PROJECT LOCATION: LUTZ, FLORIDA
PROJECT NUMBER: XXX-XXX

SUBMISSION INDEX

REV #	DATE	BY

DRAWN BY: V.FALZONE
DATE: 4/16/2024
PAGE NAME: REPETITIVE BENT
SHEET NO: 301

Kluber Architects + Engineers

Kluber, Inc.
Aurora, Illinois 60506
tel: 630.406.1213
Bloomington, Illinois 61704
tel: 309.430.6460
www.kluberinc.com

uplandDesign ltd
Landscape Architecture & Park Planning
12250 W. Ill. St., Chicago, Illinois 60666
24042 Lockport St., Plainfield, Illinois 60544
815-254-0091 www.uplandDesign.com
IL License 060-007797 Upland #1191

SUBAT NATURE CENTER
KENDALL CO FOREST PRESERVE
ELDAMAIN RD
PLANO, IL 60545

CIVIL ENGINEER
Engineering Resource Associates
3s701 West Avenue, Suite 150
Warrenville, Illinois 60555
IL License 184-001186

ISSUED
04/17/24 BID DOCUMENTS

JOB NO.	23-429-1495
DRAWN	EM
CHECKED	MK
APPROVED	MK

SHEET TITLE
CONSTRUCTION DETAILS

SHEET NUMBER
L501

det-detail name

NOTE: SCALES DEPICTED ON THIS DRAWING ARE NOT CORRECT UNLESS PLOTTED SHEET SIZE IS 30 X 42 INCHES.

Copyright © 2024 KLUBER, INC.

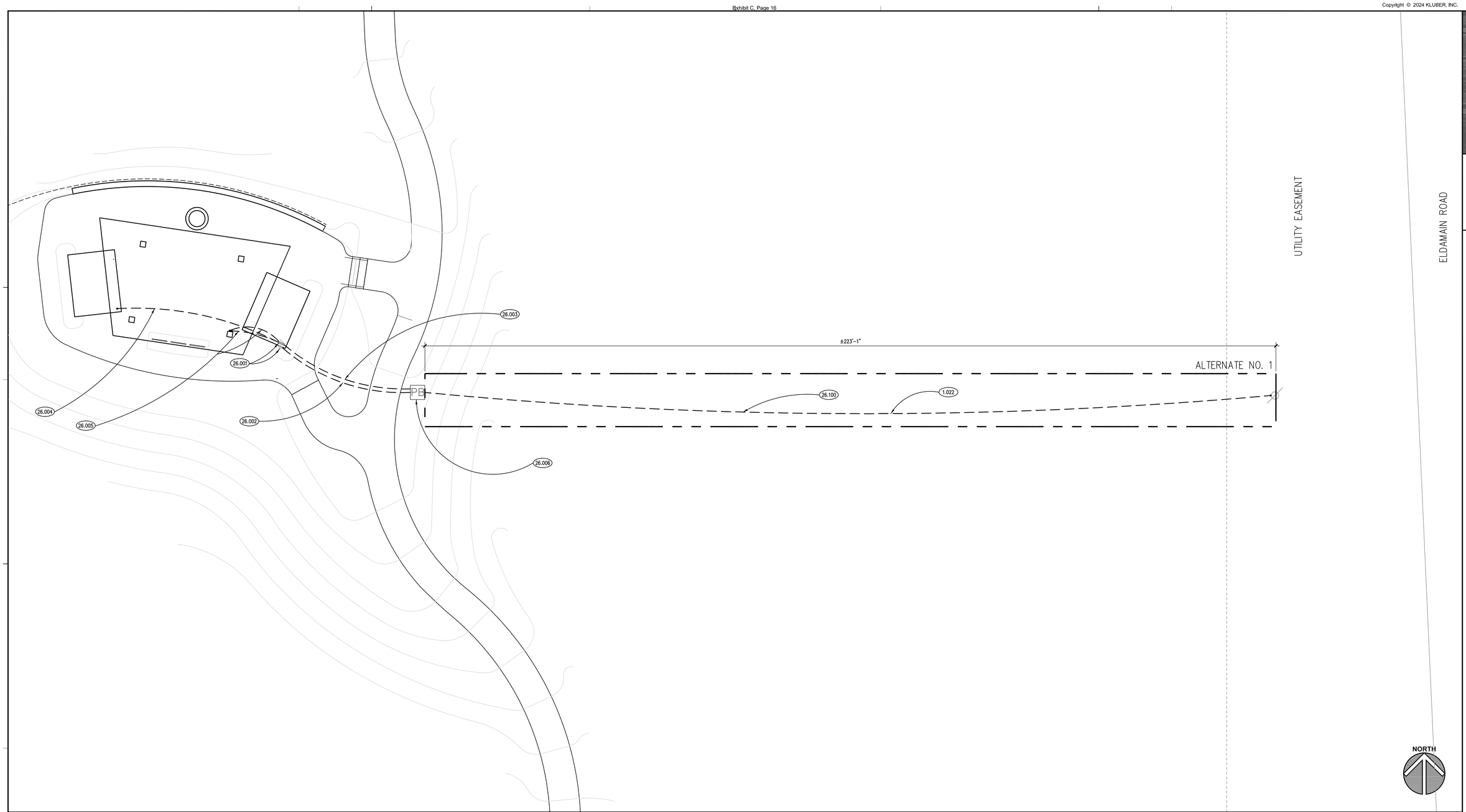

SITE PLAN (1)

SCALE: 1" = 10'-0"

KEYNOTES

KEYNOTES ARE TYPICALLY NOT DUPLICATED WITHIN A GIVEN DETAIL. AN UN-KEYNOTED ITEM IN A DETAIL IS THE SAME AS A KEYNOTED ITEM HAVING THE SAME APPEARANCE WITHIN THE SAME DETAIL.

1.022 ALTERNATE NO. 1: DIG NECESSARY AREA TO INSTALL CONDUIT AND COORDINATE PRAIRIE GRASS RESTORATION BY OWNER.

26.001 FOR REFERENCE ONLY: FUTURE ELECTRICAL SERVICE AND PANELBOARD.
26.002 PROVIDE 1 1/2" EMPTY PVC CONDUIT FROM PULL BOX LOCATION, STUBBED AND CAPPED AT BUILDING EXTERIOR (FUTURE SERVICE/METER LOCATION). TRANSITION TO GALVANIZED RIGID STEEL CONDUIT ABOVE GRADE.
26.003 PROVIDE 1" EMPTY PVC CONDUIT FROM PULL BOX LOCATION, STUBBED AND CAPPED INTO BUILDING CORNER (FUTURE PANEL LOCATION).
26.004 PROVIDE 3/4" EMPTY PVC CONDUIT FROM FUTURE PANEL LOCATION TO SE CORNER OF WEST ROOM AS SHOWN. STUB AND CAP. TRANSITION TO GALVANIZED RIGID STEEL CONDUIT ABOVE GRADE.
26.005 PROVIDE 2-2" AND 2-3/4"C EMPTY PVC CONDUIT FROM FUTURE PANEL LOCATION TO SE CORNER OF WEST ROOM AS SHOWN. STUB AND CAP. TRANSITION TO GALVANIZED RIGID STEEL CONDUIT ABOVE GRADE. ROUTE CONDUIT THROUGH COLUMN TO ACCESSIBLE CEILING LOCATION.
26.006 PROVIDE IN-GRADE PULL BOX. MINIMUM DIMENSION 11"X18". BASIS OF DESIGN: QUAZITE PG STYLE.
26.100 ALTERNATE NO. 1: PROVIDE 1-1/2" EMPTY SCH 40 PVC CONDUIT FROM GROUND MOUNTED PULL BOX STUBBED AND CAPPED AT UTILITY POWER POLE LOCATION. TRANSITION TO GALVANIZED RIGID STEEL ABOVE GRADE.

GENERAL NOTES

1. REFER TO DRAWING G100 FOR PROJECT GENERAL NOTES.
2. COORDINATE INFORMATION ON THIS DRAWING WITH INFORMATION CONTAINED ON CIVIL AND LANDSCAPE DRAWINGS.

Kluber
Architects + Engineers

Kluber, Inc.
Aurora, Illinois 60506
tel. 630.896.9213
Bloomington, Illinois 61704
tel. 309.430.0460
www.klubertec.com

SUBAT NATURE CENTER

KENDALL COUNTY FOREST PRESERVE DISTRICT
4675 ELDAMAIN ROAD
PLANO, IL 60545

ISSUED	
04/10/24	OWNER REVIEW
04/11/24	BID DOCUMENTS

JOB NO.	23-429-1495
DRAWN	SKF
CHECKED	CJH
APPROVED	CJH

SHEET TITLE

ARCHITECTURAL SITE PLAN

SHEET NUMBER

A010

NOTE: SCALES DEPICTED ON THIS DRAWING ARE NOT CORRECT UNLESS PLOTTED SHEET SIZE IS 30 X 42 INCHES.

Copyright © 2024 KLUBER, INC.

BASE BID: BROOM FINISH CONCRETE SLAB WITH TOOLED JOINTS; REFER TO STRUCTURAL DRAWINGS.

ALTERNATE NO. 2: IN LIEU OF BROOMED EXTERIOR CONCRETE SLAB, PROVIDE STAMPED AND STAINED DECORATIVE CONCRETE PAVEMENT WITH DECORATIVE STAINING AND ANIMAL TRACK STAMPING AT NATURE CENTER. REFER TO KEY FOR TYPES OF ANIMALS, TRACK SIZE, AND SPACING.

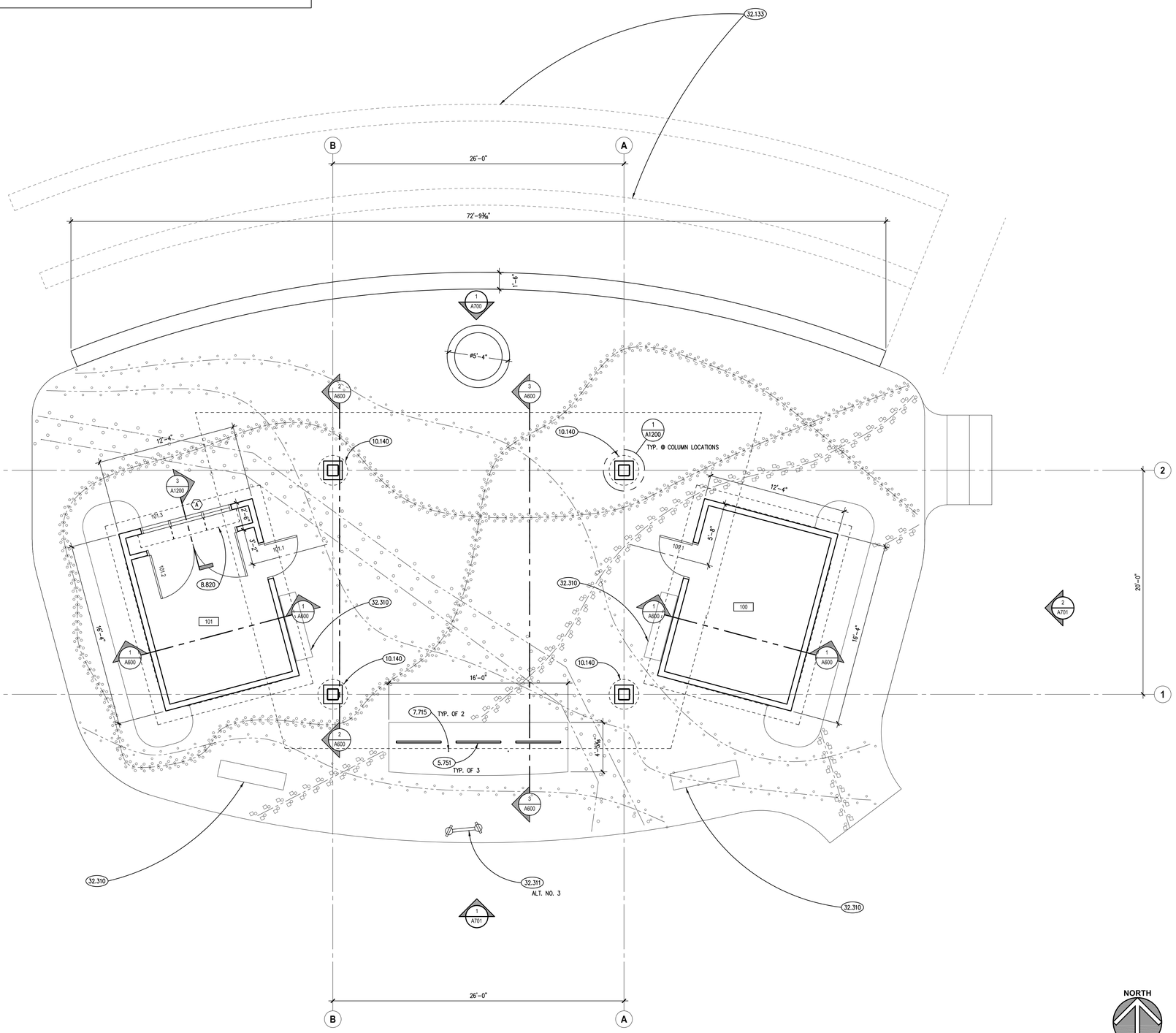

FIRST FLOOR PLAN (1)

SCALE: 1/4" = 1'-0"

KEYNOTES

KEYNOTES ARE TYPICALLY NOT DUPLICATED WITHIN A GIVEN DETAIL. AN UN-KEYNOTED ITEM IN A DETAIL IS THE SAME AS A KEYNOTED ITEM HAVING THE SAME APPEARANCE WITHIN THE SAME DETAIL.

5.751 DECORATIVE METAL PANEL: 4'-0" WIDE X 8'-0" TALL X 1/4" THICK STEEL PLATE. CNC CUT AND POWDERCOATED. EASED EDGES AND 1" RADIUS CORNERS; REFER TO ALLOWANCES AND SPECIFICATIONS.

7.715 METAL DOWNSPOUT ACCESSORY: RAIN CHAIN: DOUBLE LOOPS RAIN CHAIN, BRONZE COLOR; REFER TO SPECIFICATIONS.

8.820 DISPLAY GLAZING SYSTEM: 11 SHELF CABLE SYSTEM; REFER TO SPECIFICATIONS.

10.140 SIGNAGE: INTREPRETIVE DISPLAY TYPE; REFER TO ALLOWANCES.

32.133 FUTURE RETAINING WALL.
32.310 PARK BENCH: 6' LONG; EMBED MOUNT; CEDAR FINISH.
32.311 STATIONARY BINOCULARS: MARK II DUAL ADA COMPLIANT BASE; REFER TO SPECIFICATIONS.

ANIMAL TRACK KEY

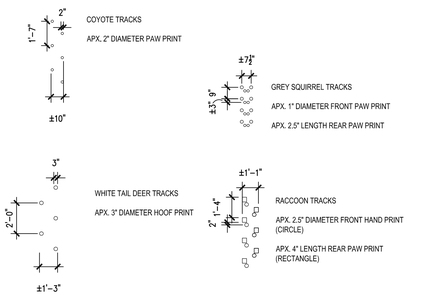

ROOM SCHEDULE

RM. NO.	ROOM NAME	RM. NO.	ROOM NAME
100	EAST SHED		
101	WEST SHED		

GENERAL NOTES

1. REFER TO DRAWING G100 FOR PROJECT GENERAL NOTES.
2. REFER TO DRAWING A700 FOR ORTHOGONAL ELEVATIONS OF EAST AND WEST SHEDS.
3. REFER TO LANDSCAPE DRAWINGS FOR SLAB DIMENSIONS.

Kluber Architects + Engineers

Kluber, Inc.
Aurora, Illinois 60506
tel. 630.896.9213
Bloomington, Illinois 61704
tel. 309.430.0460
www.klueberinc.com

SUBAT NATURE CENTER

KENDALL COUNTY FOREST PRESERVE DISTRICT
4675 ELDAMAIN ROAD
PLANO, IL 60545

ISSUED	
04/10/24	OWNER REVIEW
04/11/24	BID DOCUMENTS

JOB NO.	23-429-1495
DRAWN	SKF/PJT
CHECKED	CJH
APPROVED	CJH

SHEET TITLE

ARCHITECTURAL FIRST FLOOR PLAN

SHEET NUMBER

A310

NOTE: SCALES DEPICTED ON THIS DRAWING ARE NOT CORRECT UNLESS PLOTTED SHEET SIZE IS 30 X 42 INCHES.

Copyright © 2024 KLUBER, INC.

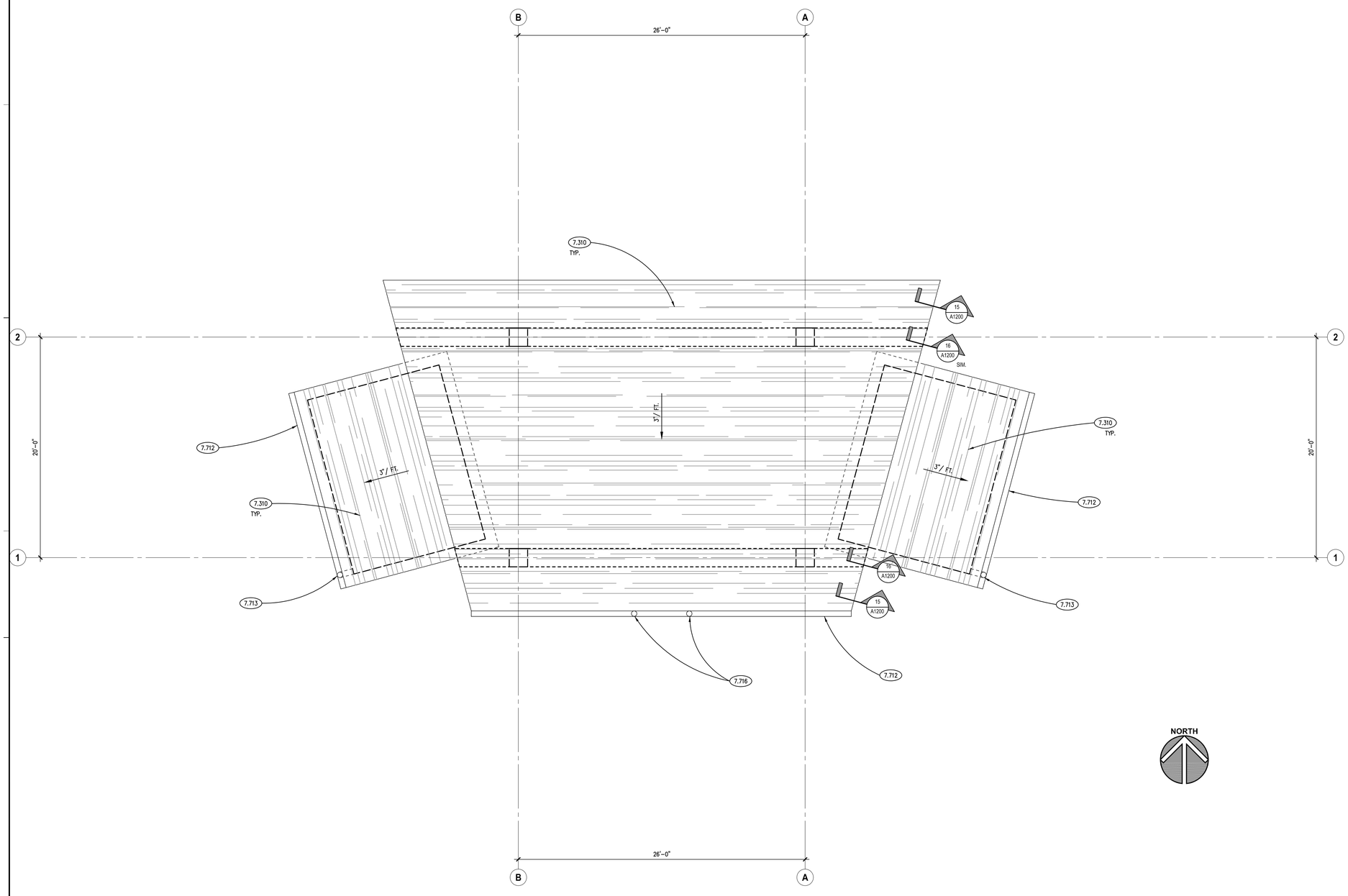

ROOF PLAN 1

SCALE: 1/16" = 1'-0"

KEYNOTES

KEYNOTES ARE TYPICALLY NOT DUPLICATED WITHIN A GIVEN DETAIL. AN UN-KEYNOTED ITEM IN A DETAIL IS THE SAME AS A KEYNOTED ITEM HAVING THE SAME APPEARANCE WITHIN THE SAME DETAIL.

7.310 ASPHALT SHINGLE ROOFING SYSTEM: REFER TO SPECIFICATIONS.
7.712 METAL GUTTER: MATERIAL, 6 INCH K-OGEE PROFILE; THICKNESS AND FINISH AS SPECIFIED.
7.713 METAL DOWNSPOUT: MATERIAL, 3 INCH X 4 INCH RIBBED; THICKNESS AND FINISH AS SPECIFIED.
7.716 METAL DOWNSPOUT ACCESSORY: RAIN CHAIN ACCESSORY: INSTALLATION KIT; REFER TO SPECIFICATIONS.

GENERAL NOTES

1. REFER TO DRAWING G100 FOR PROJECT GENERAL NOTES.

Kluber Architects + Engineers

Kluber, Inc.
Aurora, Illinois 60506
tel. 630.896.9213
Bloomington, Illinois 61704
tel. 309.430.0460
www.klubertec.com

SUBAT NATURE CENTER

KENDALL COUNTY FOREST PRESERVE DISTRICT
4675 ELDAMAIN ROAD
PLANO, IL 60545

ISSUED	
04/10/24	OWNER REVIEW
04/11/24	BID DOCUMENTS

JOB NO.	23-429-1495
DRAWN	PJT
CHECKED	CJH
APPROVED	CJH

SHEET TITLE

ROOF PLAN

SHEET NUMBER

A330

NOTE: SCALES DEPICTED ON THIS DRAWING ARE NOT CORRECT UNLESS PLOTTED SHEET SIZE IS 30 X 42 INCHES.

Copyright © 2024 KLUBER, INC.

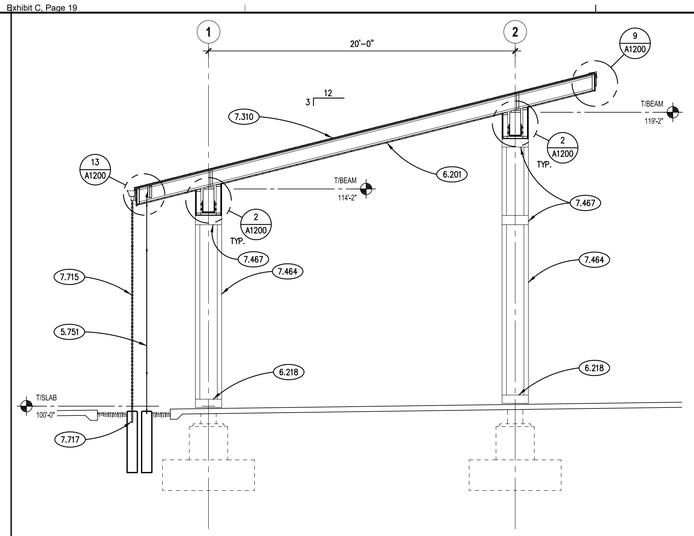

CANOPY BUILDING SECTION (3)

SCALE: 1/4" = 1'-0"

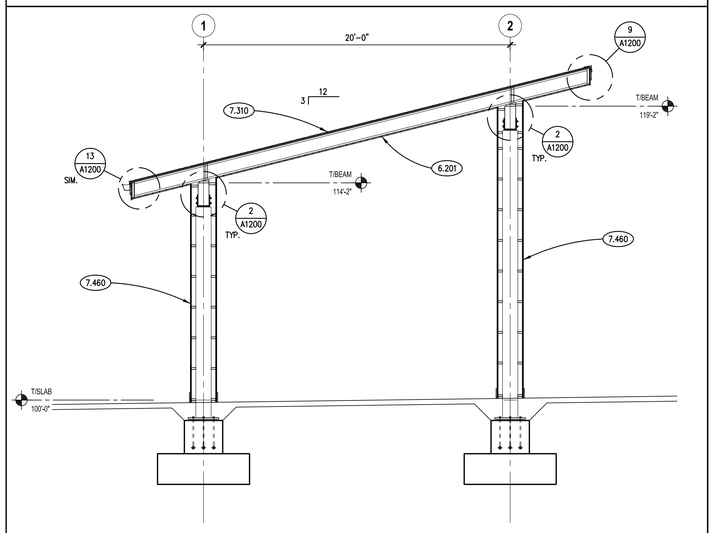

CANOPY BUILDING SECTION (2)

SCALE: 1/4" = 1'-0"

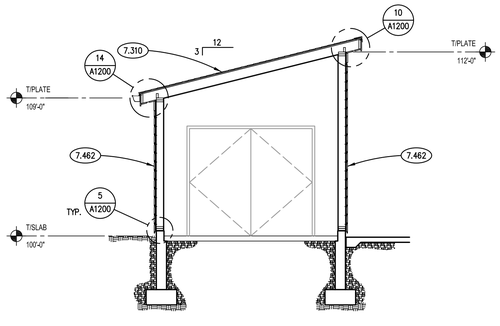

SHED BUILDING SECTION (1)

SCALE: 1/4" = 1'-0"

KEYNOTES

KEYNOTES ARE TYPICALLY NOT DUPLICATED WITHIN A GIVEN DETAIL. AN UN-KEYNOTED ITEM IN A DETAIL IS THE SAME AS A KEYNOTED ITEM HAVING THE SAME APPEARANCE WITHIN THE SAME DETAIL.

5.751 DECORATIVE METAL PANEL: 4'-0" WIDE X 8'-0" TALL X 1/2" THICK STEEL PLATE. CNC CUT AND POWDERCOATED. EASED EDGES AND 1" RADIUS CORNERS; REFER TO ALLOWANCES AND SPECIFICATIONS.

6.201 FINISH CARPENTRY: EXTERIOR SOFFIT LUMBER; 1 X 6 TONGUE AND GROOVE.
6.218 FINISH CARPENTRY: CELLULAR PVC TRIM: 1/2" x 7.25" (ACTUAL); REFER TO SPECIFICATIONS.

7.310 ASPHALT SHINGLE ROOFING SYSTEM: REFER TO SPECIFICATIONS.
7.460 FIBER CEMENT SIDING: REFER TO SPECIFICATIONS.
7.462 FIBER CEMENT SIDING: 5/8" THK. HORIZONTAL V-GROOVE LAP SIDING; 7" EXPOSURE; PRIMED. REFER TO SPECIFICATIONS.
7.464 FIBER CEMENT SIDING: 3.5" X 5/4" TRIM BOARD; PRIMED.
7.467 FIBER CEMENT SIDING: 7.25" X 5/4" TRIM BOARD; PRIMED.
7.715 METAL DOWNSPOUT ACCESSORY: RAIN CHAIN: DOUBLE LOOPS RAIN CHAIN, BRONZE COLOR; REFER TO SPECIFICATIONS.
7.717 METAL DOWNSPOUT ACCESSORY: RAIN CHAIN ACCESSORY: ANCHOR STAKE CAST INTO CONCERETE PIER; REFER TO SPECIFICATIONS.

GENERAL NOTES

1. REFER TO DRAWING G100 FOR PROJECT GENERAL NOTES.

Kluber Architects + Engineers

Kluber, Inc.
Aurora, Illinois 60506
tel. 630.466.9213
Bloomington, Illinois 61704
tel. 309.430.0460
www.kluberinc.com

SUBAT NATURE CENTER

KENDALL COUNTY FOREST PRESERVE DISTRICT
4675 ELDAMAIN ROAD
PLANO, IL 60545

ISSUED	
04/10/24	OWNER REVIEW
04/11/24	BID DOCUMENTS

JOB NO.	23-429-1495
DRAWN	PJT
CHECKED	CJH
APPROVED	CJH

SHEET TITLE

BUILDING SECTIONS

SHEET NUMBER

A600

NOTE: SCALES DEPICTED ON THIS DRAWING ARE NOT CORRECT UNLESS PLOTTED SHEET SIZE IS 30 X 42 INCHES.

Copyright © 2024 KLUBER, INC.

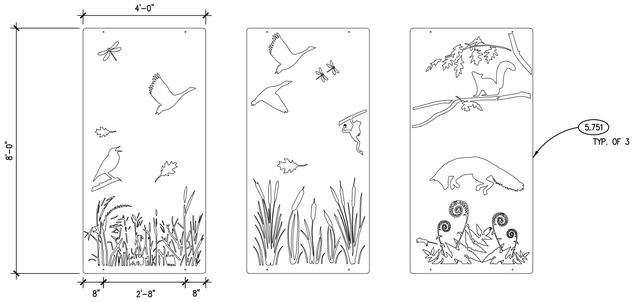

DECORATIVE METAL PANEL ELEVATIONS (4)

SCALE: 1/2" = 1'-0"

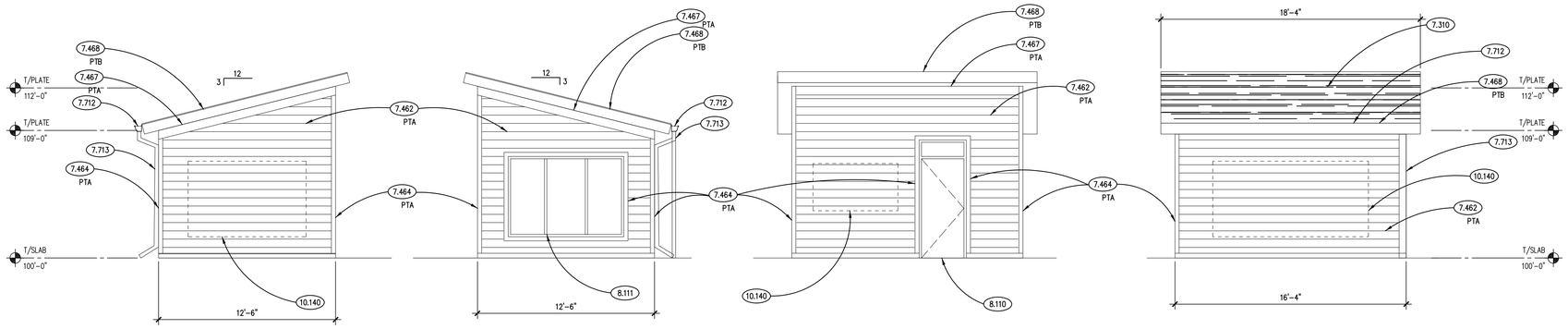

EAST SHED ELEVATIONS (3)

SCALE: 1/4" = 1'-0"

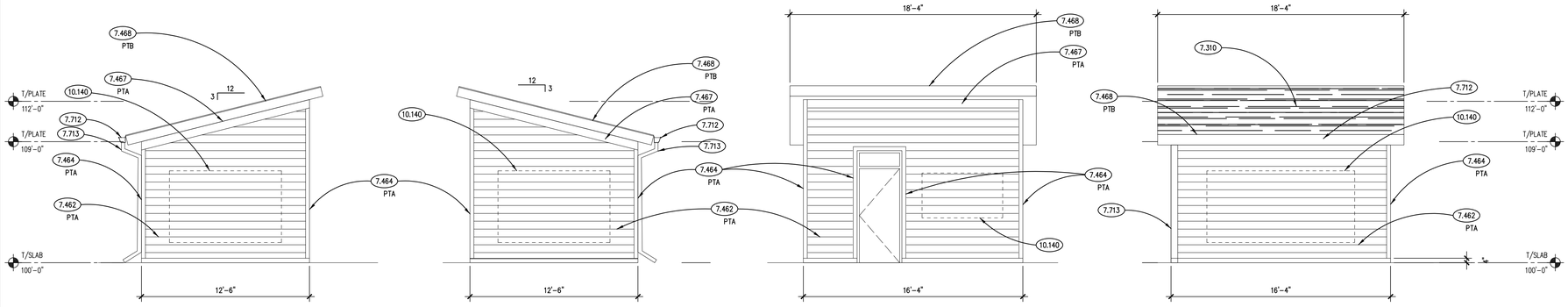

WEST SHED ELEVATIONS (2)

SCALE: 1/4" = 1'-0"

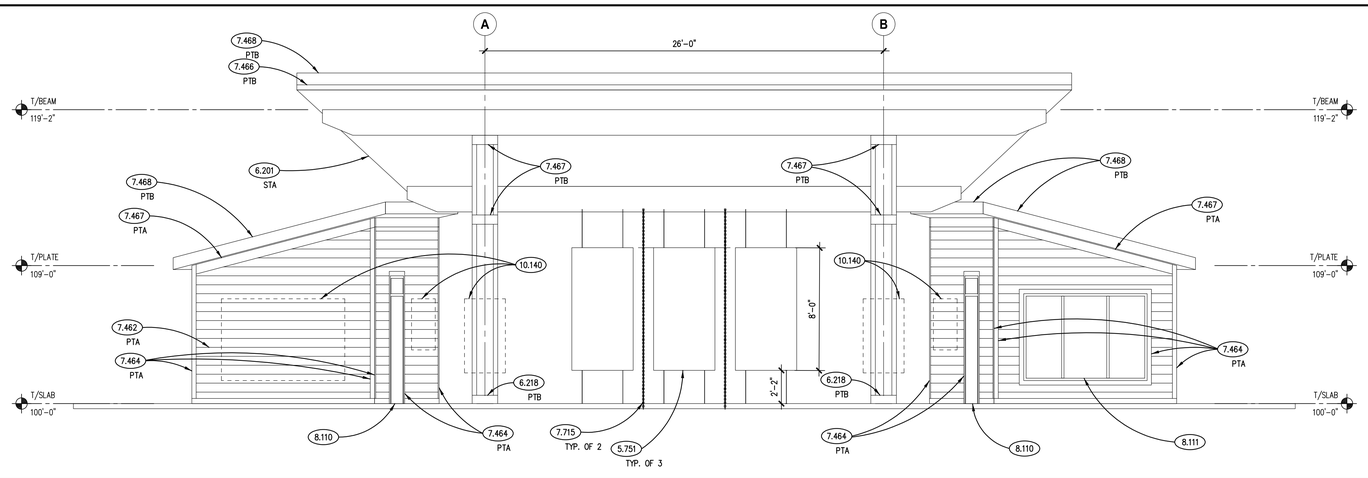

NORTH ELEVATION (1)

SCALE: 1/4" = 1'-0"

KEYNOTES

KEYNOTES ARE TYPICALLY NOT DUPLICATED WITHIN A GIVEN DETAIL. AN UN-KEYNOTED ITEM IN A DETAIL IS THE SAME AS A KEYNOTED ITEM HAVING THE SAME APPEARANCE WITHIN THE SAME DETAIL.

5.751 DECORATIVE METAL PANEL: 4'-0" WIDE X 8'-0" TALL X 1/4" THICK STEEL PLATE. CNC CUT AND POWDERCOATED. EASED EDGES AND 1" RADIUS CORNERS; REFER TO ALLOWANCES AND SPECIFICATIONS.

6.201 FINISH CARPENTRY: EXTERIOR SOFFIT LUMBER; 1 X 6 TONGUE AND GROOVE.
6.218 FINISH CARPENTRY: CELLULAR PVC TRIM: 1/2" x 7.25" (ACTUAL); REFER TO SPECIFICATIONS.

7.310 ASPHALT SHINGLE ROOFING SYSTEM: REFER TO SPECIFICATIONS.
7.462 FIBER CEMENT SIDING: 5/8" THK. HORIZONTAL V-GROOVE LAP SIDING; 7" EXPOSURE; PRIMED. REFER TO SPECIFICATIONS.
7.464 FIBER CEMENT SIDING: 3.5" X 5/4" TRIM BOARD; PRIMED.
7.466 FIBER CEMENT SIDING: 5.5" X 5/4" TRIM BOARD; PRIMED.
7.467 FIBER CEMENT SIDING: 7.25" X 5/4" TRIM BOARD; PRIMED.
7.468 FIBER CEMENT SIDING: 9.25" X 3/4" TRIM BOARD; PRIMED.
7.712 METAL GUTTER: MATERIAL, 6 INCH K-OGEE PROFILE; THICKNESS AND FINISH AS SPECIFIED.
7.713 METAL DOWNSPOUT: MATERIAL, 3 INCH X 4 INCH RIBBED; THICKNESS AND FINISH AS SPECIFIED.
7.715 METAL DOWNSPOUT ACCESSORY: RAIN CHAIN: DOUBLE LOOPS RAIN CHAIN, BRONZE COLOR; REFER TO SPECIFICATIONS.

8.110 STEEL DOOR FRAME: REFER TO DOOR, FRAME AND BORROWED LIGHT SCHEDULE.
8.111 STEEL WINDOW FRAME: REFER TO DOOR, FRAME AND BORROWED LIGHT SCHEDULE.

10.140 SIGNAGE: INTREPRETIVE DISPLAY TYPE; REFER TO ALLOWANCES.

GENERAL NOTES

1. REFER TO DRAWING G100 FOR PROJECT GENERAL NOTES.

Kluber
Architects + Engineers

Kluber, Inc.
Aurora, Illinois 60506
tel. 630.896.9213
Bloomington, Illinois 61704
tel. 309.430.0460
www.klubertinc.com

SUBAT NATURE CENTER

KENDALL COUNTY FOREST PRESERVE DISTRICT
4675 ELDAMAIN ROAD
PLANO, IL 60545

ISSUED	
04/10/24	OWNER REVIEW
04/11/24	BID DOCUMENTS

JOB NO.	23-429-1495
DRAWN	SKF
CHECKED	CJH
APPROVED	CJH

SHEET TITLE

EXTERIOR BUILDING ELEVATIONS

SHEET NUMBER

A700

NOTE: SCALES DEPICTED ON THIS DRAWING ARE NOT CORRECT UNLESS PLOTTED SHEET SIZE IS 30 X 42 INCHES.

Copyright © 2024 KLUBER, INC.

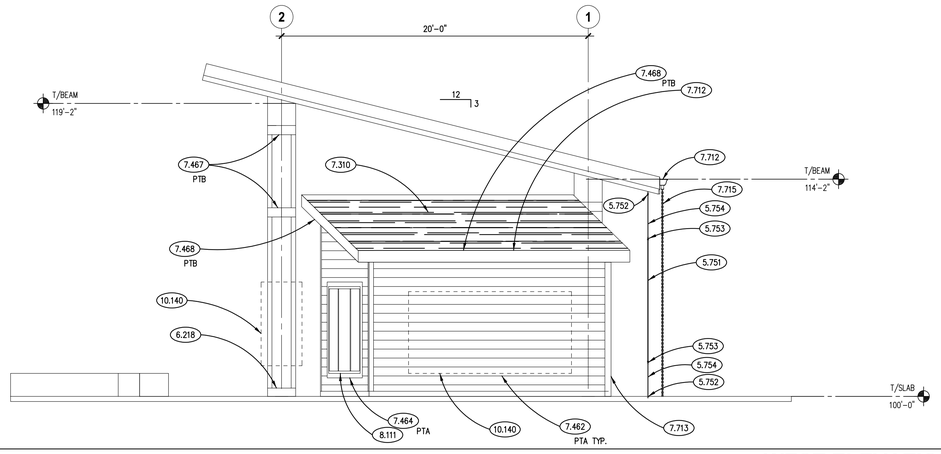

WEST ELEVATION (3)

SCALE: 1/4" = 1'-0"

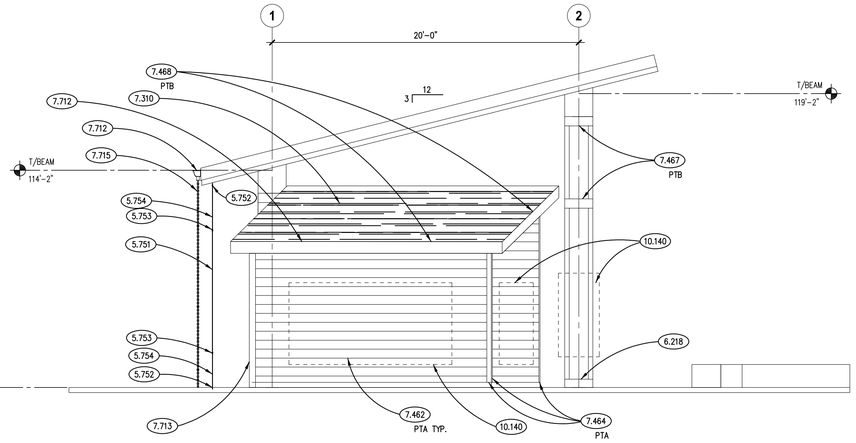

EAST ELEVATION (2)

SCALE: 1/4" = 1'-0"

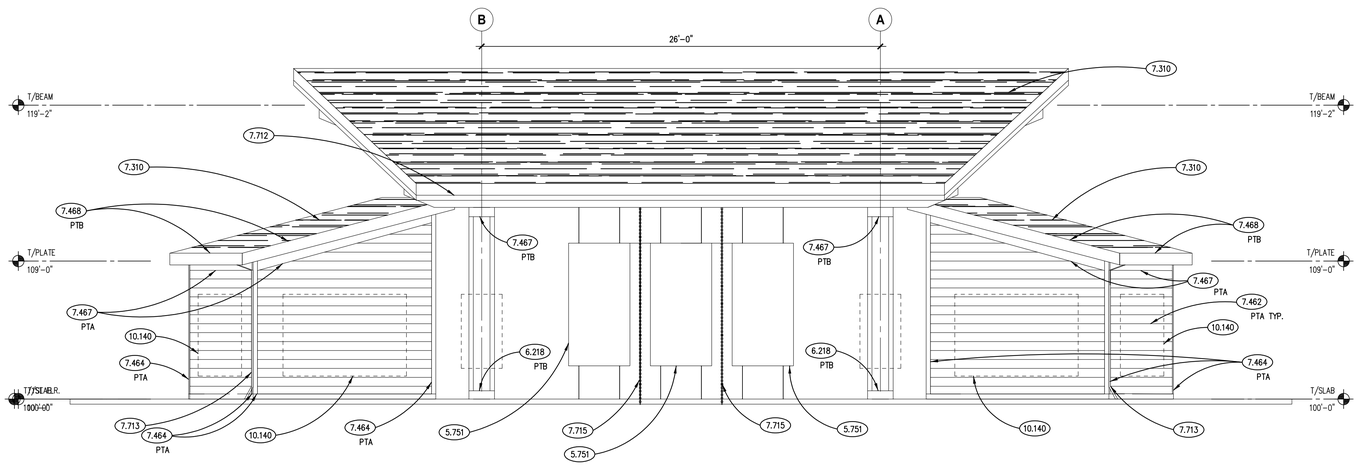

SOUTH ELEVATION (1)

SCALE: 1/4" = 1'-0"

KEYNOTES

KEYNOTES ARE TYPICALLY NOT DUPLICATED WITHIN A GIVEN DETAIL. AN UN-KEYNOTED ITEM IN A DETAIL IS THE SAME AS A KEYNOTED ITEM HAVING THE SAME APPEARANCE WITHIN THE SAME DETAIL.

5.751 DECORATIVE METAL PANEL: 4'-0" WIDE X 8'-0" TALL X 1/4" THICK STEEL PLATE. CNC CUT AND POWDERCOATED. EASED EDGES AND 1" RADIUS CORNERS; REFER TO ALLOWANCES AND SPECIFICATIONS.
5.752 DECORATIVE METAL PANEL ACCESSORY: 1/2" DIA. STUD-END PLUG-LOCK WIRE ROPE END FITTING CONNECTED TO SIMPSON HANGER OR CAST INTO CONCRETE PIER, STAINLESS STEEL; REFER ALLOWANCES AND SPECIFICATIONS.
5.753 DECORATIVE METAL PANEL ACCESSORY: CLOSED BODY CLEVIS-TO-WIRE TURNBUCKLE END FITTING: SLEEVE GRIP, STAINLESS STEEL; REFER TO ALLOWANCES AND SPECIFICATIONS.
5.754 DECORATIVE METAL PANEL ACCESSORY: REINFORCED CABLE: 3/8" DIA. – 7 X 19 STRAND CORE WIRE ROPE ACCESSORY; REFER TO ALLOWANCES AND SPECIFICATIONS.

6.218 FINISH CARPENTRY: CELLULAR PVC TRIM: 1/2" x 7.25" (ACTUAL); REFER TO SPECIFICATIONS.

7.310 ASPHALT SHINGLE ROOFING SYSTEM: REFER TO SPECIFICATIONS.
7.462 FIBER CEMENT SIDING: 5/8" THK. HORIZONTAL V-GROOVE LAP SIDING; 7" EXPOSURE; PRIMED. REFER TO SPECIFICATIONS.
7.464 FIBER CEMENT SIDING: 3.5" X 5/4" TRIM BOARD; PRIMED.
7.467 FIBER CEMENT SIDING: 7.25" X 5/4" TRIM BOARD; PRIMED.
7.468 FIBER CEMENT SIDING: 9.25" X 3/4" TRIM BOARD; PRIMED.
7.712 METAL GUTTER: MATERIAL, 6 INCH K-OGEE PROFILE; THICKNESS AND FINISH AS SPECIFIED.
7.713 METAL DOWNSPOUT: MATERIAL, 3 INCH X 4 INCH RIBBED; THICKNESS AND FINISH AS SPECIFIED.
7.715 METAL DOWNSPOUT ACCESSORY: RAIN CHAIN: DOUBLE LOOPS RAIN CHAIN, BRONZE COLOR; REFER TO SPECIFICATIONS.

8.111 STEEL WINDOW FRAME: REFER TO DOOR, FRAME AND BORROWED LIGHT SCHEDULE.

10.140 SIGNAGE: INTREPRETIVE DISPLAY TYPE; REFER TO ALLOWANCES.

GENERAL NOTES

1. REFER TO DRAWING G100 FOR PROJECT GENERAL NOTES.

Kluber
Architects + Engineers
Kluber, Inc.
Aurora, Illinois 60506
tel. 630.896.9213
Bloomington, Illinois 61704
tel. 309.430.0460
www.klueberinc.com

SUBAT NATURE CENTER

KENDALL COUNTY FOREST PRESERVE DISTRICT
4675 ELDAMAIN ROAD
PLANO, IL 60545

ISSUED	
04/10/24	OWNER REVIEW
04/11/24	BID DOCUMENTS

JOB NO.	23-429-1495
DRAWN	SKF
CHECKED	CJH
APPROVED	CJH

SHEET TITLE

EXTERIOR BUILDING ELEVATIONS

SHEET NUMBER

A701

NOTE: SCALES DEPICTED ON THIS DRAWING ARE NOT CORRECT UNLESS PLOTTED SHEET SIZE IS 30 X 42 INCHES.

Copyright © 2024 KLUBER, INC.

DOOR AND FRAME SCHEDULE

ROOM NO.	ROOM NAME	DOOR NO.	DOOR QTY.	DOOR W	DOOR H	DOOR THK.	DOOR TYPE	DOOR HAND	DOOR MAT.	STEEL DOORS GA.	STEEL DOORS MDL.	STEEL DOORS CORE	WOOD DOORS GRD.	WOOD DOORS CORE	WOOD DOORS VENEER	WOOD DOORS CUT	WOOD DOORS MATCH	DOOR FINISH	DOOR GLASS	FRAME TYPE	FRAME MAT.	FRAME GA.	FRAME FINISH	FRAME GLASS	DETAILS HEAD	DETAILS JAMB	DETAILS SILL	HDWR SET	FIRE RATING (MIN.)	REMARKS
100	EAST SHED	100.1	1	3'-0"	7'-0"	1-3/4"	F	LHR	STL	16	2	PU	–	–	–	–	–	P2/PTB	–	1	STL	16	P2/PTB	LG6	8/A1200	11/A1200	–	1	–	–
101	WEST SHED	101.1	1	3'-0"	7'-0"	1-3/4"	F	RHR	STL	16	2	PU	–	–	–	–	–	P2/PTB	–	1	STL	16	P2/PTB	LG6	8/A1200	11/A1200	–	1	–	–
		101.2	2	4'-0"	7'-0"	1-3/4"	F	RHR	STL	16	1	HC	–	–	–	–	–	P2/PTB	–	2	STL	16	P2/PTB	–	–	12/A1200	–	2	–	–
		101.3	1	8'-2"	5'-8"	–	–	–	–	–	–	–	–	–	–	–	–	P2/PTB	–	3	STL	16	P2/PTB	LG6	8/A1200	7/A1200	6/A1200	–	–	–

DOOR TYPES

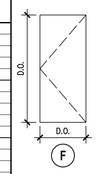

DOOR HARDWARE SCHEDULE

SET NO.	HINGES	LOCK SET	EXIT DEVICE	CLOSER	HOLDER	STOP	THRES-HOLD	KICK PLATE	MOP PLATE	WEATHER STRIPPING	SWEEP	PUSH/ PULL	REMOV. MULLION	REMARKS
1	BUTT	YES	–	YES	W/CLOSER	W/CLOSER	YES	YES	–	YES	YES	–	–	1
2	BUTT	YES	–	–	–	WALL	–	–	–	–	–	–	–	2

DOOR SCHEDULE REMARKS

1. PREP DOOR AND FRAME FOR ELECTRIC STRIKE.

FRAME TYPES

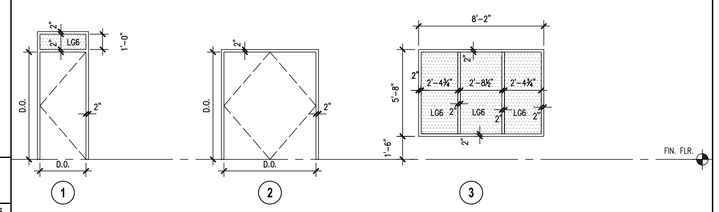

HARDWARE SCHEDULE REMARKS

1. TYPICAL EXTERIOR SHED DOOR HARDWARE: STOREROOM FUNCTION LOCKSET.
2. DISPLAY CASE DOUBLE DOOR HARDWARE: DUMMY LEVER TRIM ON PULL SIDE OF EACH DOOR LEAF; ROLLER LATCH FOR EACH LEAF; PROVIDE WALL STOPS FOR BOTH LEAVES, MOUNT RHR LEAF WALL STOP TO INSIDE FACE OF EXTERIOR DOOR.

DOOR SCHEDULE ABBREVIATIONS

DOOR / FRAME MATERIAL		STEEL DOOR GAGE		WOOD DOOR GRADE		WOOD DOOR VENEER CUTS	
AL	ALUMINUM	20	LEVEL 1 – STD. DUTY	P	PREMIUM	PS	PLAIN SLICED
STL	STEEL	18	LEVEL 2 – HEAVY DUTY	C	CUSTOM	QS	QUARTER SLICED
WD	WOOD	16	LEVEL 3 – EXTRA HVY. DUTY	E	ECONOMY	RC	RIFT CUT
SPECIAL DOOR TYPES		14	LEVEL 4 – MAXIMUM DUTY	**WOOD DOOR CORE**		R	ROTARY CUT
AC	ACCORDION	**STEEL DOOR MODEL**		HC	HONEYCOMB		
AP	ACCESS PANEL	1	FULL FLUSH	MB	MINERAL BOARD	**WOOD DOOR VENEER MATCHING**	
DK	DARKROOM REVOLVING	2	SEAMLESS	PC5	5-PLY PARTICLE BOARD	BK	BOOK MATCH
HS	OVERHEAD HIGH-SPEED	3	STILE & RAIL	SC	SOUND-RATED	SL	SLIP MATCH
OR	OVERHEAD ROLLING	**STEEL DOOR CORE**				RAN	RANDOM MATCH
OS	OVERHEAD SECTIONAL	HC	HONEYCOMB	**WOOD DOOR VENEER**		E	END MATCH
RV	REVOLVING	MB	MINERAL BOARD	BW	BIRCH – WHITE (SAPWOOD)	CON	CONTINUOUS MATCH
SG	OVERHEAD SECURITY GRILLE	PS	POLYSTYRENE	HB	PRIMED HARDBOARD	RUN	RUNNING MATCH
DOOR / FRAME FINISHES		PU	POLYURETHANE	HPDL	DECORATIVE LAMINATE	BAL	BALANCE MATCH
A	ANODIZED	SS	STEEL STIFFENERS	MW	MAPLE – WHITE (SAPWOOD)	CB	CENTER BALANCE MATCH
P_	PAINTED – SEE FIN. SCHED.			OR	RED OAK	P	PAIR MATCH
S_	STAINED – SEE FIN. SCHED.			OW	WHITE OAK	S	SET MATCH
				PO	POPLAR		

HARDWARE MOUNTING HEIGHTS

HARDWARE COMPONENT	PREFERRED MOUNTING HEIGHT FROM BOTTOM OF DOOR FRAME	ACCEPTABLE RANGE IF PREFERRED MOUNTING HEIGHT NOT POSSIBLE
LOCKSETS, LATCHSETS	39" TO CENTERLINE OF LEVER	38" TO 42"
EXIT DEVICES	39" TO CENTERLINE OF PUSH PAD	38" TO 42"
DEADBOLT LOCKS	46" TO CENTERLINE OF CYLINDER	30" TO 48"
PUSH PLATES	45" TO CENTERLINE OF PUSH PLATE	N/A
PULLS, COMBINATION PUSH/PULL BARS	42" TO CENTERLINE OF PULL/BAR	N/A
ROLLER LATCHES	45" TO CENTERLINE OF LATCH STRIKE	N/A

COLOR CODE SCHEDULE

AREA	FINISH CODE	MATERIAL	MANUFACTURER	DESCRIPTION
WALLS	PTA	PAINT	SHERWIN WILLIAMS	COLOR: SW2803 ROOKWOOD TERRA COTTA
	PTB	PAINT	SHERWIN WILLIAMS	COLOR: SW6067 TURKISH COFFEE
CEILING	STA	STAIN/SEALER	PPG	CLEAR SATIN POLYURETHANE VARNISH
				REFER TO SPECIFICATIONS

FINISH TYPES

AREA	FIN.	DESCRIPTION	AREA	FIN.	DESCRIPTION
FLOOR	F1	NOT USED	CEILING	C1	NOT USED
BASE	B1	NOT USED			
WALLS	W1	NOT USED	PAINT	P1	LATEX – "EGGSHELL"
				P2	LATEX – "SEMI-GLOSS"
				P3	LATEX – "SATIN"
GLASS	LG6	SECURITY GLAZING LAMINATED GLASS		P4	NOT USED
				P5	PREFINISHED: REFER TO SPECS.

GENERAL NOTES

1. REFER TO DRAWING G100 FOR PROJECT GENERAL NOTES.
2. REFER TO ELEVATIONS AND DETAILS FOR SPECIFIC FINISH LOCATIONS.

Kluber
Architects + Engineers
Kluber, Inc.
Aurora, Illinois 60506
tel. 630.896.9213
Bloomington, Illinois 61704
tel. 309.430.0460
www.klueberinc.com

SUBAT NATURE CENTER

KENDALL COUNTY FOREST PRESERVE DISTRICT
4975 ELDAMAIN ROAD
PLANO, IL 60545

ISSUED	
04/10/24	OWNER REVIEW
04/11/24	BID DOCUMENTS

JOB NO.	23-429-1495
DRAWN	SKF
CHECKED	CDH
APPROVED	CJH

SHEET TITLE
DOOR, FRAME & HARDWARE SCHEDULES

SHEET NUMBER
A800

NOTE: SCALES DEPICTED ON THIS DRAWING ARE NOT CORRECT UNLESS PLOTTED SHEET SIZE IS 30 X 42 INCHES.

Copyright © 2024 KLUBER, INC.

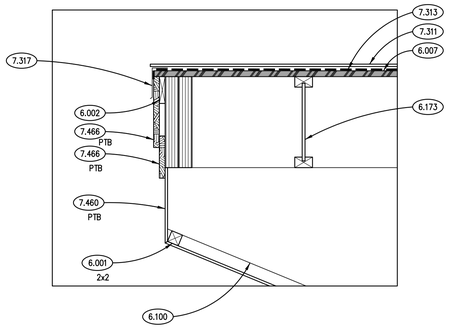

CANOPY RAKE DETAIL (16)
SCALE: 3" = 1'-0"

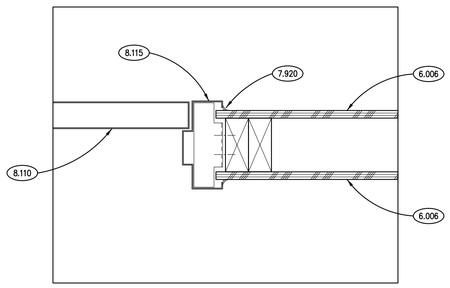

DOOR JAMB DETAIL (12)
SCALE: 3" = 1'-0"

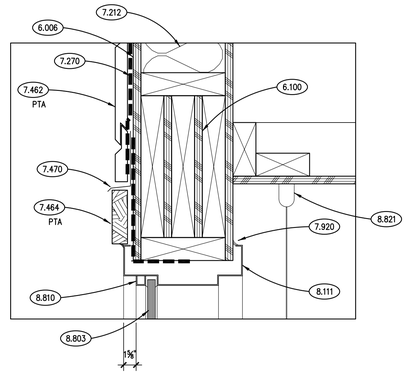

TYPICAL HEAD DETAIL (8)
SCALE: 3" = 1'-0"

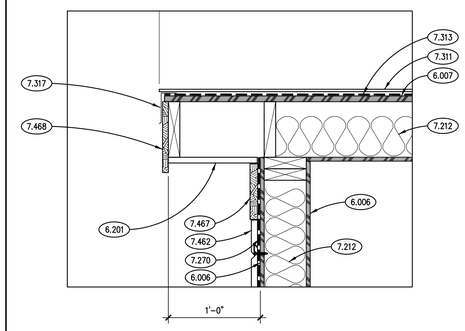

ROOF RAKE DETAIL (4)
SCALE: 1½" = 1'-0"

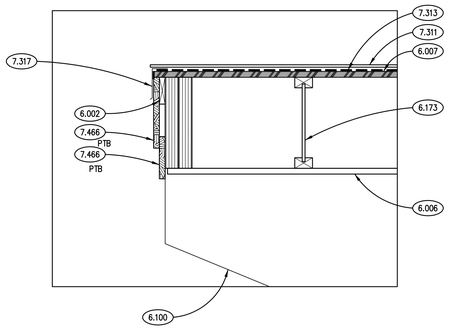

CANOPY RAKE DETAIL (15)
SCALE: 1½" = 1'-0"

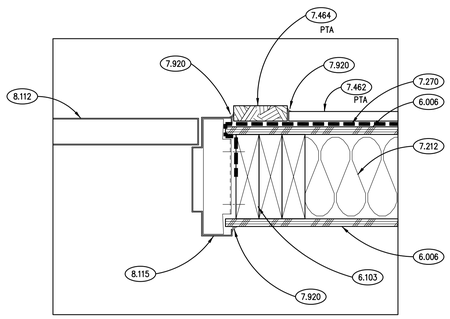

DOOR JAMB DETAIL (11)
SCALE: 3" = 1'-0"

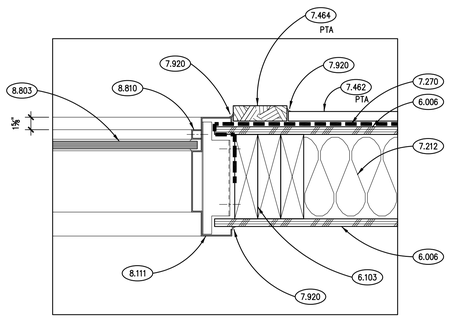

WINDOW JAMB DETAL (7)
SCALE: 3" = 1'-0"

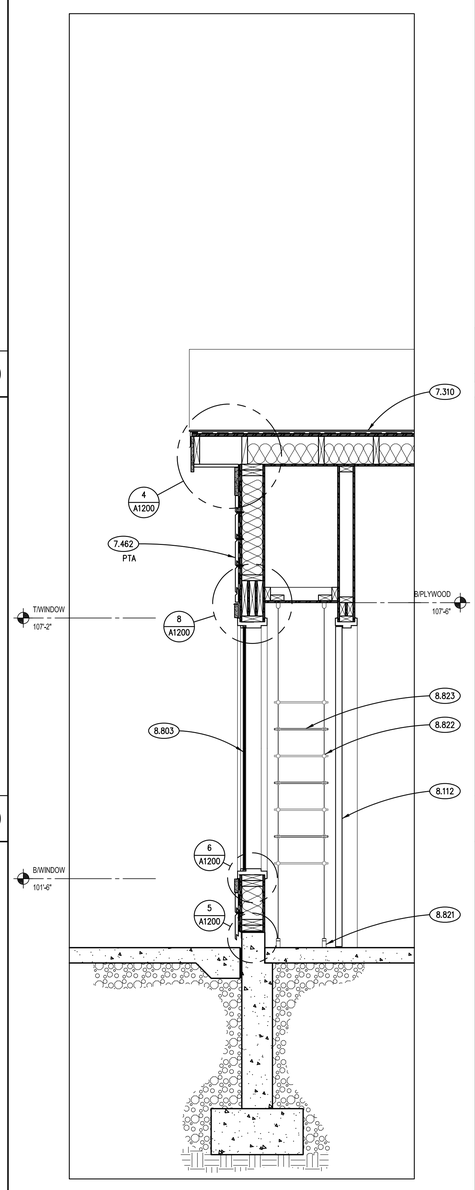

WALL SECTION (3)
SCALE: 3/4" = 1'-0"

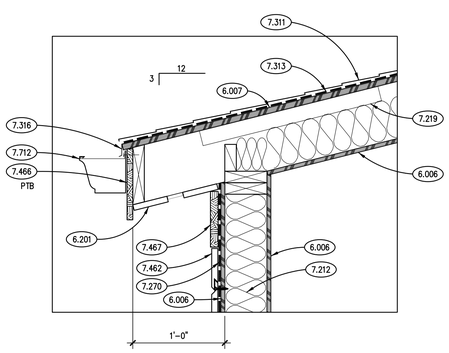

SECTION DETAIL (14)
SCALE: 1½" = 1'-0"

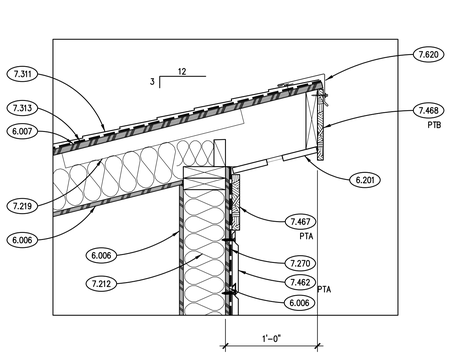

SECTION DETAIL (10)
SCALE: 1½" = 1'-0"

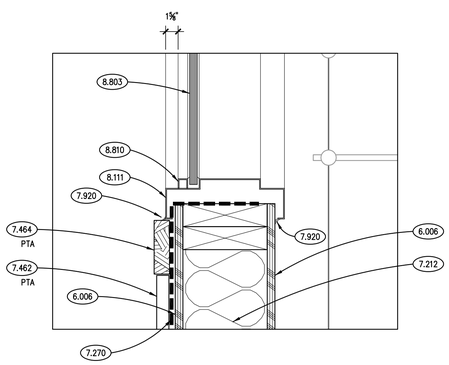

WINDOW SILL DETAIL (6)
SCALE: 3" = 1'-0"

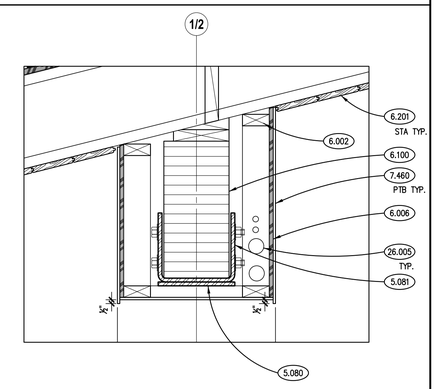

SECTION DETAIL (2)
SCALE: 1½" = 1'-0"

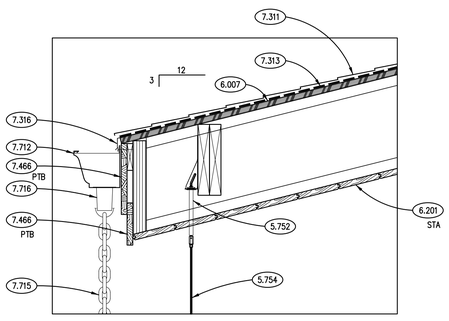

SECTION DETAIL (13)
SCALE: 1½" = 1'-0"

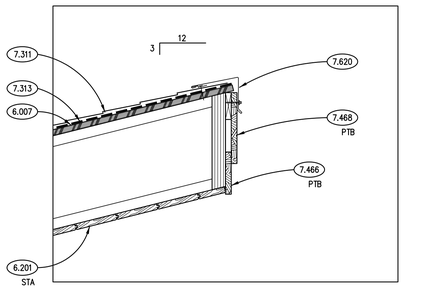

SECTION DETAIL (9)
SCALE: 1½" = 1'-0"

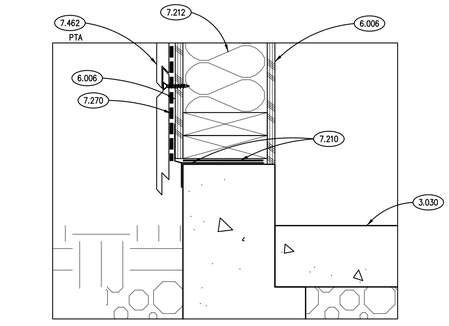

TYPICAL SECTION DETAIL (5)
SCALE: 3" = 1'-0"

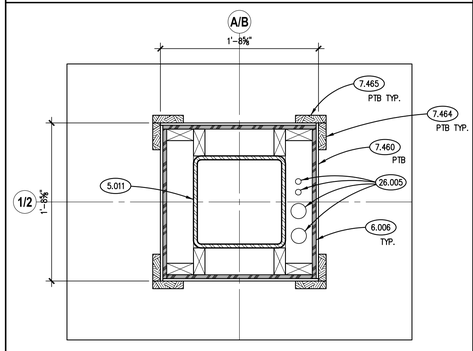

TYP. COLUMN PLAN DETAIL (1)
SCALE: 1½" = 1'-0"

KEYNOTES

KEYNOTES ARE NOT ALWAYS REPEATED ACROSS ALL DRAWINGS ON THIS SHEET. AN UN-KEYNOTED ITEM ON THIS SHEET IS THE SAME AS A KEYNOTED ITEM ON THIS SHEET HAVING THE SAME GRAPHIC APPEARANCE.

3.030 CAST-IN-PLACE CONCRETE: REFER TO STRUCTURAL DRAWINGS.

5.011 STRUCTURAL STEEL: COLUMN; REFER TO STRUCTURAL DRAWINGS.
5.080 METAL FABRICATION: STEEL PLATE; REFER TO STRUCTURAL DRAWINGS.
5.081 METAL FABRICATION: STEEL BEAM SADDLE; REFER TO STRUCTURAL DRAWINGS.
5.752 DECORATIVE METAL PANEL ACCESSORY: 1/2" DIA. STUD-END PLUG-LOCK WIRE ROPE END FITTING CONNECTED TO SIMPSON HANGER OR CAST INTO CONCRETE PIER, STAINLESS STEEL; REFER ALLOWANCES AND SPECIFICATIONS.
5.754 DECORATIVE METAL PANEL ACCESSORY: REINFORCED CABLE: 3/8" DIA. – 7 X 19 STRAND CORE WIRE ROPE ACCESSORY; REFER TO ALLOWANCES AND SPECIFICATIONS.

6.001 ROUGH CARPENTRY: WOOD BLOCKING; DIMENSIONAL LUMBER; SIZE AS INDICATED; REFER TO SCHEDULE FOR TREATMENT.
6.002 ROUGH CARPENTRY: WOOD BLOCKING; DIMENSIONAL LUMBER; SIZE AS REQUIRED; REFER TO SCHEDULE FOR TREATMENT.
6.006 ROUGH CARPENTRY: PLYWOOD: 1/2" THICK; REFER TO SPECIFICATIONS FOR TREATMENT.
6.007 ROUGH CARPENTRY: PLYWOOD: 3/4" THICK; REFER TO SPECIFICATIONS FOR TREATMENT.
6.100 WOOD FRAMING: BEAM/HEADER; REFER TO STRUCTURAL DRAWINGS.
6.103 WOOD FRAMING: STUDS; REFER TO STRUCTURAL DRAWINGS.
6.173 WOOD I-JOIST: REFER TO STRUCTURAL DRAWINGS FOR SIZE AND SPACING.
6.201 FINISH CARPENTRY: EXTERIOR SOFFIT LUMBER; 1 X 6 TONGUE AND GROOVE.

7.212 INSULATION: THERMAL BATT; KRAFT FACED FIBERGLASS; THICKNESS TO FILL CAVITY, UNLESS INDICATED OTHERWISE; R-21.
7.219 INSULATION ACCESSORY: FORMED FOAM BAFFLE FOR ATTIC VENTILATION; REFER TO SPECIFICATIONS.
7.210 INSULATION ACCESSORY: SILL PLATE SEALER; CLOSED-CELL FOAM TAPE TYPE WITH RUBBERIZED ADHESIVE MEMBRANE; REFER TO SPECIFICATIONS.
7.270 AIR BARRIER SHEET MEMBRANE: REFER TO SPECIFICATIONS.
7.310 ASPHALT SHINGLE ROOFING SYSTEM: REFER TO SPECIFICATIONS.
7.311 ASPHALT SHINGLES; ARCHITECTURAL LAMINATED TYPE.
7.313 ASPHALT SHINGLES SHEET MATERIAL: UNDERLAYMENT.
7.316 ASPHALT SHINGLES METAL FLASHING: GUTTER APRON; MATERIAL, THICKNESS AND FINISH AS SPECIFIED.
7.317 ASPHALT SHINGLES METAL FLASHING: EDGE FLASHING; MATERIAL, THICKNESS AND FINISH AS SPECIFIED.
7.460 FIBER CEMENT SIDING: REFER TO SPECIFICATIONS.
7.462 FIBER CEMENT SIDING: 5/8" THK. HORIZONTAL V-GROOVE LAP SIDING; 7" EXPOSURE; PRIMED. REFER TO SPECIFICATIONS.
7.464 FIBER CEMENT SIDING: 3.5" X 5/4" TRIM BOARD; PRIMED.
7.465 FIBER CEMENT SIDING: 4.5" X 5/4" TRIM BOARD; PRIMED.
7.466 FIBER CEMENT SIDING: 5.5" X 5/4" TRIM BOARD; PRIMED.
7.467 FIBER CEMENT SIDING: 7.25" X 5/4" TRIM BOARD; PRIMED.
7.468 FIBER CEMENT SIDING: 9.25" X 3/4" TRIM BOARD; PRIMED.
7.470 FIBER CEMENT SIDING ACCESSORY: DOOR/WINDOW PREFINISHED METAL HEAD FLASHING; INSTALL OVER HEAD TRIM AND UNDER AIR BARRIER. TAPE ALL JOINTS.
7.620 METAL COPING FLASHING: MATERIAL, THICKNESS AND FINISH AS SPECIFIED.
7.712 METAL GUTTER: MATERIAL, 6 INCH K-OGEE PROFILE; THICKNESS AND FINISH AS SPECIFIED.
7.715 METAL DOWNSPOUT ACCESSORY: RAIN CHAIN: DOUBLE LOOPS RAIN CHAIN, BRONZE COLOR; REFER TO SPECIFICATIONS.
7.716 METAL DOWNSPOUT ACCESSORY: RAIN CHAIN ACCESSORY: INSTALLATION KIT; REFER TO SPECIFICATIONS.
7.920 JOINT SEALANT: REFER TO SCHEDULE IN SPECIFICATION SECTION 07 92 00; PROVIDE BACKER ROD OR BOND BREAKER.

8.110 STEEL DOOR FRAME: REFER TO DOOR, FRAME AND BORROWED LIGHT SCHEDULE.
8.111 STEEL WINDOW FRAME: REFER TO DOOR, FRAME AND BORROWED LIGHT SCHEDULE.
8.112 STEEL DOOR: REFER TO DOOR, FRAME AND BORROWED LIGHT SCHEDULE.
8.115 STEEL FRAME ACCESSORY: DOOR FRAME ANCHORS (PROVIDE AT JAMBS ONLY).

8.803 GLAZING: LAMINATED GLASS TYPE LG-6; REFER TO SPECIFICATIONS.
8.810 GLAZING ACCESSORY: GLAZING STOP.
8.821 DISPLAY GLAZING SYSTEM ACCESSORY: TOP OR BOTTOM FIXING AND CABLE; REFER TO SPECIFICATIONS.
8.822 DISPLAY GLAZING SYSTEM ACCESSORY: SHELF SUPPORTS, CABLE MOUNTED AND FULLY ADJUSTABLE; REFER TO SPECIFICATIONS.
8.823 DISPLAY GLAZING SYSTEM ACCESSORY: TEMPERED GLASS SHELVES: 14 INCH X 36 INCH X 10MM THICKNESS; REFER TO SPECIFICATIONS.

26.005 PROVIDE 2-2" AND 2-3/4"C EMPTY PVC CONDUIT FROM FUTURE PANEL LOCATION TO SE CORNER OF WEST ROOM AS SHOWN. STUB AND CAP. TRANSITION TO GALVANIZED RIGID STEEL CONDUIT ABOVE GRADE. ROUTE CONDUIT THROUGH COLUMN TO ACCESSIBLE CEILING LOCATION.

GENERAL NOTES

1. REFER TO DRAWING G100 FOR PROJECT GENERAL NOTES.

Kluber
Architects + Engineers
Kluber, Inc.
Aurora, Illinois 60506
tel. 630.466.9213
Bloomington, Illinois 61704
tel. 309.430.0460
www.klueberinc.com

SUBAT NATURE CENTER
KENDALL COUNTY FOREST PRESERVE DISTRICT
4875 ELDAMAIN ROAD
PLANO, IL 60545

ISSUED	
04/10/24	OWNER REVIEW
04/11/24	BID DOCUMENTS

JOB NO.	23-429-1495
DRAWN	PJT
CHECKED	CJH
APPROVED	CJH

SHEET TITLE
SECTION DETAILS

SHEET NUMBER
A1200

NOTE: SCALES DEPICTED ON THIS DRAWING ARE NOT CORRECT UNLESS PLOTTED SHEET SIZE IS 30 X 42 INCHES.

Copyright © 2024 KLUBER, INC.

GENERAL NOTES

1. THE CONTRACTOR SHALL FIELD VERIFY THE DIMENSIONS, ELEVATIONS, ETC. NECESSARY FOR THE PROPER CONSTRUCTION AND ALIGNMENT OF THE NEW PORTIONS OF THE WORK TO THE EXISTING WORK. THE CONTRACTOR SHALL MAKE ALL MEASUREMENTS NECESSARY FOR FABRICATION AND ERECTION OF STRUCTURAL MEMBERS. ANY DISCREPANCY SHALL BE IMMEDIATELY BROUGHT TO THE ATTENTION OF THE STRUCTURAL ENGINEER.

2. CONTRACTOR SHALL PROVIDE PROTECTION FOR ALL SUBGRADES, FOUNDATIONS AND SLABS FROM FROST EFFECTS DURING INCLEMENT WEATHER.

3. CONTRACTOR SHALL COORDINATE ALL DIMENSIONS AND ELEVATIONS WITH ARCHITECTURAL, M.E.P., AND VENDOR PREPARED SHOP DRAWINGS AND EXISTING CONDITIONS. SEE ARCHITECTURAL DRAWINGS FOR WORKPOINTS. SEE CIVIL DRAWINGS FOR BENCHMARKS.

4. CONTRACTOR SHALL PROVIDE ALL TEMPORARY SHORING, SHEETING, BRACING ETC. AS REQUIRED TO PROTECT EXCAVATIONS AND EXISTING FOUNDATIONS DURING THE CONSTRUCTION PROCESS. CONTRACTOR SHALL PROVIDE ALL REQUIRED ENGINEERING REQUIRED FOR SUCH SYSTEMS BY AN ILLINOIS LICENSED STRUCTURAL ENGINEER.

5. BACKFILLING OF FOUNDATIONS AND BELOW GRADE WALLS SHALL BE COMPLETED IN SUCH A MANNER TO AVOID OVERTURNING OF THE WALL. PROVIDE ALL TEMPORARY BRACING AS REQUIRED.

6. HORIZONTAL RUNS OF CABLING, CONDUIT, PIPING OR ANY SUCH M.E.P. ITEMS ARE NOT TO BE PLACED WITHIN THE CROSS-SECTION OF THE SLABS/DECKS. ALL SUCH ITEMS ARE TO BE INSTALLED BELOW THE SLAB/DECK WITH INDUSTRY STANDARD, ENGINEERED APPROVED SYSTEMS. THE CONTRACTOR DURING HIS BID SHALL ASSUME THAT HE NEEDS TO PROVIDE AND ENGINEER ALL SUPPLEMENTAL FRAMING ELEMENTS TO SPAN TO THE STRUCTURAL ELEMENTS THEREBY BY-PASSING THE SLABS/DECKS. ALL SUCH SYSTEMS ARE SUBJECT TO THE REVIEW OF ENGINEER OF RECORD. SEE REQUIREMENTS FOR HANGING COMPONENTS DIRECTLY FROM ROOF DECKS ON SHEET S010.

7. REFER TO DRAWING G100 FOR PROJECT GENERAL NOTES.

8. REFER TO ARCHITECTURAL DRAWINGS FOR ALL FINISHES (I.E. FLOOR , WALL, CEILING, ETC.)

9.THE STRUCTURAL DRAWINGS SHALL BE USED IN CONJUNCTION WITH ALL CONTRACT DRAWINGS, VENDOR DRAWINGS AND THE SPECIFICATIONS. THE CONTRACTOR SHALL VERIFY THE REQUIREMENTS OF OTHER TRADES FOR LOCATIONS OF SLEEVES, CHASES, HANGERS, INSERTS, ANCHORS, HOLES AND OTHER ITEMS TO BE PLACED OR SET IN THE STRUCTURAL WORK.

10. THE STRUCTURAL DRAWINGS REPRESENT THE FINISHED STRUCTURE. THE CONTRACTOR SHALL PROVIDE ALL TEMPORARY GUYING AND BRACING REQUIRED TO ERECT AND HOLD THE STRUCTURE IN ALIGNMENT UNTIL ALL STRUCTURAL WORK AND CONNECTIONS HAVE BEEN COMPLETED. THE INVESTIGATION, DESIGN, SAFETY, ADEQUACY AND INSPECTION OF SUCH GUYING/BRACING IS THE SOLE RESPONSIBILITY OF THE CONTRACTOR.

11. DRAWINGS INDICATE GENERAL AND TYPICAL DETAILS OF CONSTRUCTION. WHERE CONDITIONS ARE NOT SPECIFICALLY TAGGED OR SHOWN, SIMILAR DETAILS OF CONSTRUCTION SHALL BE USED, SUBJECT TO THE APPROVAL OF THE ENGINEER.

12. ALL NON-LOAD BEARING WALLS ARE TO BE HELD DOWN AND AWAY FROM FRAMING ELEMENTS TO ALLOW FOR THESE ELEMENTS TO DEFLECT UNDER THEIR ANTICIPATED LOADING CONDITIONS. DO NOT BLOCK SOLID AROUND FRAMING ELEMENTS PASSING THROUGH NON-LOAD BEARING WALLS.

13. TRADE CONTRACTORS TO COORDINATE WITH M.E.P. DRAWINGS FOR ALL REQUIRED PIPE SLEEVES, HANGERS, CAST-IN / RECESSED COMPONENTS AND INSERTS FOR M.E.P. EQUIPMENT AT SLABS AND WALLS.

STEEL FRAMING NOTES

S 1. ALL STRUCTURAL STEEL SHALL CONFORM TO THE LATEST EDITIONS OF AISC'S "STEEL CONSTRUCTION MANUAL" AND "CODE OF STANDARD PRACTICE FOR STEEL BUILDING AND BRIDGES".

S 2. ALL WELDING SHALL BE IN ACCORDANCE WITH AWS D1.1 USING E70XX ELECTRODES. UNLESS OTHERWISE NOTED, PROVIDE CONT. MIN. SIZED FILLET WELDS PER AISC REQUIREMENTS.

S 3. THE STEEL FABRICATOR AND ERECTOR ARE TO DEVELOP AND IMPLEMENT A QUALITY CONTROL PROGRAM AS SPECIFIED IN AISC 360-10, CHAPTER N. THE STEEL FABRICATOR AND ERECTOR ARE TO PERFORM QUALITY CONTROL INSPECTIONS OF THE STEEL AT THE FABRICATION PLANT AND AT THE PROJECT SITE. REFER TO AISC 360-10, TABLES N5.4-1, N5.4-2, N5.4-3, N5.6-1, N5.6-2, N5.6-3 AND N6.1 FOR MINIMUM INSPECTION REQUIREMENTS.

S 4. STRUCTURAL STEEL ERECTION TO COMPLY WITH OSHA REQUIREMENTS.

S 5. STEEL PROPERTIES:

A. W & WT SHAPES = A992 (Fy = 50 KSI)
B. ANGLES, PLATES, CHANNELS & THREADED RODS = A36 (Fy = 36 KSI)
C. STRUCTURAL BOLTS = 3/4"Ø A325N
D. ANCHOR BOLTS = F1554 GRADE 36 (Fy = 36 KSI)
E. WELDING ELECTRODES = E70XX

S 6. FINISH REQUIREMENTS:

A. TYPICAL CLEANING = SSPC-SP2 OR SSPC-SP3
B. PAINT = FABRICATOR'S STANDARD. SEE SPECIFICATIONS FOR ADDITIONAL PAINTING REQUIREMENTS.
C. GALVANIZED STEEL = ASTM A123, 1.7 OZ./SQ. FT MIN.
D. TOUCH-UP PRIMER = FABRICATOR'S STANDARD.

S 7. ALL EXTERIOR STEEL ELEMENTS, BOLTS, WASHERS, LINTELS, ETC. TO BE GALVANIZED.

S 8. BEAMS SHALL BE FIELD WELDED TO BEARING PLATES U.N.O. WELD SIZE TO BE 1/4"x2" LONG ON BOTH SIDES OF ELEMENTS. DO NOT WELD LOCATIONS NOTED ON PLAN AS **. SEE LINTEL SCHEDULE NOTES REGARDING WELDING REQUIREMENTS.

S 18. ACCEPTABLE EXPANSION ANCHOR PRODUCTS INCLUDE THE FOLLOWING:
a. HILTI: KWIK BOLT 3 EXPANSION ANCHOR.
b. SIMPSON STRONG-TIE: STRONG-BOLT 2 WEDGE ANCHOR.

TESTING AND INSPECTION

GENERAL

1. THE APPROVED TESTING AGENCY SHALL BE RETAINED BY THE OWNER.

2. THE APPROVED TESTING AGENCY SHALL BE THE "SPECIAL INSPECTOR" REFERRED TO IN OF THE INTERNATIONAL BUILDING CODE (IBC), CHAPTER 17 "STRUCTURAL TESTS AND SPECIAL INSPECTIONS."

3. REFER TO CHAPTER 17 OF THE 2018 INTERNATIONAL BUILDING CODE FOR DEFINITION OF TERMS.

4. THE TESTING AGENCY SHALL SUBMIT TO THE ENGINEER OF RECORD ONE (1) COPIES OF WEEKLY REPORTS OF THE TEST AND INSPECTIONS CONDUCTED DURING THE WEEK. THE REPORTS SHALL STATE IF THE TESTS AND INSPECTIONS MET THE PROJECT REQUIREMENTS AND, IF NOT, WHAT FOLLOW-UP TESTS OR INSPECTIONS WILL BE MADE.

5. THE TESTING AGENCY SHALL NOTIFY GENERAL CONTRACTOR IMMEDIATELY IF ANY OF THE SCHEDULED TESTS FAIL IN ORDER TO AVOID PROJECT DELAYS.

6. SEE SPECIFICATION SECTION 1400 "QUALITY REQUIREMENTS" FOR ADDITIONAL INFORMATION.

FOUNDATION INSPECTION

4. ALL FOUNDATION EXCAVATIONS SHALL BE OBSERVED AND TESTED BY A REPRESENTATIVE OF A QUALIFIED GEOTECHNICAL ENGINEERING FIRM. DAILY REPORTS OF OBSERVATIONS SHALL BE PREPARED.

2. PROVIDE CONTINUOUS INSPECTION FOR THE FOLLOWING:

A. VERIFY USE OF PROPER MATERIALS, DENSITIES AND LIFT THICKNESSES DURING PLACEMENT AND COMPACTION OF CONTROLLED FILL.

3. PROVIDE PERIODIC INSPECTION FOR THE FOLLOWING:

A. VERIFY MATERIALS BELOW FOOTINGS AS ADEQUATE TO ACHIEVE THE DESIGN BEARING CAPACITY.

B. VERIFY EXCAVATIONS ARE EXTENDED TO PROPER DEPTH AND HAVE REACHED PROPER MATERIAL.

C. PERFORM CLASSIFICATION AND TESTING OF CONTROLLED FILL MATERIALS.

D. PRIOR TO PLACEMENT OF CONTROLLED FILL, OBSERVE SUBGRADE AND VERIFY THAT SITE HAS BEEN PREPARED PROPERLY.

REINFORCED CONCRETE INSPECTION

1. PROVIDE CONTINUOUS INSPECTION FOR THE FOLLOWING:

A. SAMPLING OF FRESH CONCRETE FOR SLUMP, AIR CONTENT AND TEMPERATURE AT THE TIME OF MAKING SPECIMENS FOR STRENGTH TESTS PER ACI 318, CHAPTERS 5.6, 5.8.

B. INSPECTION OF CONCRETE PLACEMENT PER ACI 318, CHAPTERS 5.9, 5.10.

2. PROVIDE PERIODIC INSPECTIONS FOR THE FOLLOWING FOR CONFORMANCE TO ACI 318:

A. INSPECT REINFORCING STEEL PLACEMENT PER ACI 318, CHAPTERS 3.5, 7.1-7.7.

B. VERIFY USE OF REQUIRED MIX DESIGN PER ACI 318, CHAPTERS 4, 5.2-5.4.

C. MAINTENANCE OF SPECIFIED CURING TEMPERATURE AND TECHNIQUES PER ACI 318, CHAPTERS 5.11-5.13.

3. INSPECT FORMWORK FOR SHAPE, LOCATION AND DIMENSIONS PER ACI 318, CHAPTER 6.1.1.

STRUCTURAL WOOD CONSTRUCTION

1. INSPECTION OF FABRICATED STRUCTURAL LOAD-BEARING MEMBERS REQUIRED PER IBC SECTION 1704.2 SHALL CONSIST OF EITHER THE FOLLOWING:

A. SPECIAL INSPECTION IN ACCORDANCE WITH IBC 1704.2.5.1 "FABRICATION AND IMPLEMENTATION PROCEDURES".

B. FABRICATOR PARTICIPATION IN A QUALITY ASSURANCE INSPECTION PROGRAM IN ACCORDANCE WITH IBC 1704.2.5.2 "FABRICATOR APPROVAL".

2. CONTINUOUS SPECIAL INSPECTION IS REQUIRED DURING FIELD GLUING OPERATIONS OF ELEMENTS OF THE MAIN WINDFORCE-RESISTING SYSTEM. PERIODIC SPECIAL INSPECTION IS REQUIRED FOR NAILING, BOLTING, ANCHORING AND OTHER FASTENING OF ELEMENTS OF THE MAIN WIND-FORCE RESISTING SYSTEM, INCLUDING WOOD SHEAR WALLS, WOOD DIAPHRAGMS, DRAG STRUTS, BRACES AND HOLD-DOWNS.

FOUNDATION & SLAB NOTES

F 1. ALL CONCRETE WORK SHALL CONFORM TO THE REQUIREMENTS OF ACI 301, "SPECIFICATION FOR STRUCTURAL CONCRETE BUILDINGS" AND ACI 318, "BUILDING CODE REQUIREMENTS FOR STRUCTURAL CONCRETE". HOT WEATHER CONCRETING SHALL BE IN ACCORDANCE WITH ACI 305. COLD WEATHER CONCRETING SHALL BE IN ACCORDANCE WITH ACI 306.

F 2. CONCRETE CONTRACTOR TO COORDINATE ALL DIMENSIONS, ELEVATIONS, SLOPES, ETC. OF ALL CONCRETE SLABS / FOUNDATIONS WITH ARCHITECTURAL DRAWINGS.

F 3. CONCRETE STRENGTHS AS FOLLOWS (28 DAY):

A. FOOTINGS, FOUNDATION WALLS & PIERS= 3,000 PSI
B. INTERIOR SLABS= 4,000 PSI
C. EXTERIOR SLABS= 4,500 PSI
D. SEE SPECIFICATIONS FOR DETAILED CONCRETE MIX DESIGNS.

F 4. REINFORCEMENT:

A. BARS, TIES & STIRRUPS: ASTM A615 GRADE 60, DEFORMED

B. W.W.F.: ASTM A185, SMOOTH. FLAT SHEETS ONLY. PLACEMENT (I.E. SUPPORT SPACING, LAP SPLICE LENGTHS, ETC.) TO BE IN ACCORDANCE WITH THE STRUCTURAL WELDED WIRE REINFORCEMENT MANUAL OF STANDARD PRACTICE; (WWR-500); WIRE REINFORCEMENT INSTITUTE; LATEST EDITION.

C. WELDABLE BARS: ASTM A706 GRADE 60, DEFORMED.

D. PROVIDE LAP SPLICES IN ACCORDANCE WITH ACI 301.

E. FABRICATE & DETAIL REINFORCING STEEL IN ACCORDANCE WITH CRSI (DA4) MANUAL OF STANDARD PRACTICE .

F. FACTORY MADE WIRE BAR SUPPORTS AND HOLDING BARS SHALL BE PROVIDED FOR ALL REINFORCING STEEL TO ENSURE MINIMUM CONCRETE COVER AND MAINTAIN POSITION DURING CASTING.

G. PROVIDE ADEQUATE AND PROPER SUPPORT OF ALL REINFORCING STEEL AS REQUIRED TO PROVIDE THE COVER REQUIREMENTS NOTED ON THE PROJECT DRAWINGS AND ACI 318.

H. CONCRETE COVER FOR REINFORCEMENT TO BE AS FOLLOWS:

LOCATION / APPLICATION	COVER
SLAB ON GRADE:	3"
FOUNDATION WALL:	2"
FOOTINGS:	3"

F 5. BACKFILLING OF FOUNDATIONS AND BELOW GRADE WALLS SHALL BE COMPLETED IN SUCH A MANNER TO AVOID OVERTURNING OF THE WALL. PROVIDE ALL TEMPORARY BRACING AS REQUIRED.

F 6. CONTRACTOR SHALL PROVIDE PROTECTION FOR ALL SUBGRADES, FOUNDATIONS AND SLABS FROM FROST EFFECTS DURING INCLEMENT WEATHER.

F 7. ALL BOTTOM OF EXTERIOR FOOTINGS SHALL HAVE A MINIMUM OF 3'-6" GROUND COVER. COORDINATE ALL FINAL GRADE ELEVATIONS WITH ARCHITECTURAL AND CIVIL DRAWINGS.

F 8. SEE ARCHITECTURAL DRAWINGS AND PROJECT SPECIFICATIONS FOR ALL WATERPROOFING, DAMPROOFING AND INSULATION REQUIREMENTS.

F 9. ALUMINUM MATERIALS OF ANY TYPE ARE PROHIBITED FROM BEING CAST, EMBEDDED OR IN CONTACT WITH THE CONCRETE WORK.

F 10. CONCRETE CONTRACTOR TO COORDINATE WITH M.E.P. CONTRACTORS FOR ANY REQUIRED FOUNDATION DEPRESSIONS, OPENINGS, KNOCK-OUTS, FLOOR DRAINS, INSERTS, ETC.

F 11. ACCEPTABLE INJECTION EPOXY ADHESIVE PRODUCTS INCLUDE THE FOLLOWING:
a. HILTI HY-150 FAST-CURING INJECTION ADHESIVE SYSTEM.
b. SIMPSON STRONG-TIE SET-XP HIGH-STRENGTH ANCHORING ADHESIVE SYSTEM.
c. POWERS FASTENERS PURE 110+ EPOXY INJECTION ADHESIVE ANCHORING SYSTEM.

F 12. FOUNDATION AND SLAB ELEMENTS HAVE BEEN DESIGNED IN ACCORDANCE WITH THE RECOMMENDATIONS SET FORTH IN THE GEOTECHNICAL REPORT COMPLETED BY GEOCON PROFESSIONAL SERVICES DATED APRIL 9, 2024. PER GEOCON'S REPORT, FOUNDATION AND SLAB ELEMENTS SHALL BE DESIGNED FOR A MAXIMUM BEARING PRESSURE OF 3,000 PSF FOUNDED ON UNDISTURBED OR ENGINEERED FILL AT THE DESIGN ELEVATION NOTED ON THE DRAWINGS. CONTRACTOR SHALL ALERT THE QUALIFIED AND APPROVED TESTING AGENCY TO VERIFY THE SUB-BASE MATERIAL PRIOR TO INSTALLING FORMWORK, REINFORCING STEEL AND CASTING FOUNDATIONS AND SLABS. REMOVE AND REPLACE ANY UNSUITABLE MATERIALS AS DEEMED NECESSARY BY THE PROJECT SOILS REPORT AND TESTING AGENCY.

FOUNDATION & SLAB SYMBOLS & NOMENCLATURE

F a. S.C.J. DENOTES SLAB CONTRACTION/CONTROL JOINT.

F b. SF6.0 DENOTES SPREAD FOOTING. SEE SCHEDULE ON SHEET S310.

F c. SLAB S1 DENOTES CONCRETE SLAB. SEE PLANS AND SCHEDULE ON SHEET S311 FOR ALL SLAB TYPES AND LOCATIONS.

F d. DENOTES TOP OF FOOTING ELEVATION. ALL FOOTINGS NOT SPECIFICALLY TAGGED SHALL HAVE A TOP OF FOOTING ELEVATION OF 96'-6".

F e. [6'-0"] DENOTES ANTICIPATED BOTTOM OF FOOTING UNDERCUT BASED ON INFORMATION EXTRACTED FROM THE PROJECT SOILS REPORT NOTED ABOVE.

WOOD FRAMING NOTES

W1. WOOD FRAMING TO CONFORM TO THE LATEST EDITIONS OF THE NATIONAL DESIGN SPECIFICATIONS FOR WOOD CONSTRUCTION MANUAL.

W2. ALL STRUCTURAL PLYWOOD SHEATHING / DECKING TO MEET THE REQUIREMENTS OF THE "VOLUNTARY PRODUCT STANDARD PS 1-09" BY THE NATIONAL INSTITUTE OF STANDARDS AND TECHNOLOGY.

W3. ALL STRUCTURAL PLYWOOD SHEATHING / DECKING TO MEET THE REQUIREMENTS OF "APA PRP-108/ APA PRP-108, FORM B455 - PERFORMANCE STANDARDS AND QUALITY POLICY FOR STRUCTURAL-USE PANELS".

W4. PENETRATIONS THROUGH THE ROOF REQUIRE SUPPLEMENTAL FRAMING AS DETAILED ON SHEET S800. CONTRACTOR TO COORDINATE SIZE, LOCATIONS AND QUANTITIES WITH THE FULL SET OF DOCUMENTS .

W5. ALL NON-LOAD BEARING WALLS ARE TO BE HELD DOWN AND AWAY FROM FRAMING ELEMENTS TO ALLOW FOR THESE ELEMENTS TO DEFLECT UNDER THEIR ANTICIPATED LOADING CONDITIONS.

W6. HORIZONTAL RUNS OF CABLING, CONDUIT, PIPING OR ANY SUCH M.E.P. ITEMS ARE NOT TO BE PLACED THROUGH LOAD BEARING WALLS. ALL SUCH ITEMS ARE TO TRAVEL VERTICALLY WITHIN LOAD BEARING WALLS WITH INDUSTRY STANDARD, ENGINEER APPROVED SUPPORT SYSTEMS. DO NOT HANG DIRECTLY FROM WOOD SHEATHING DECKS.

W7. ALL PENETRATIONS ARCHITECTURAL AND M.E.P. ITEMS THROUGH WOOD LOAD BEARING WALLS REQUIRE A HEADER. CONTRACTOR TO COORDINATE SIZE, LOCATIONS AND QUANTITIES WITH THE FULL SET OF DOCUMENTS AVAILABLE AT THE TIME OF BIDDING. IF A HEADER IS NOT SPECIFICALLY TAGGED, THE CONTRACTOR SHALL ASSUME THAT THE MINIMUM /HEADER WILL BE A H1.

W8. ALL LIGHT GAUGE WOOD CONNECTORS ARE TO BE AS MANUFACTURED BY SIMPSON STRONG-TIE. PROVIDE FASTENER TYPE AND QUANTITY THAT RESULTS IN THE MAXIMUM TABULATED VALUES.

W9. SEE SCHEDULE ON SHEET S800 FOR TYPICAL MINIMUM FASTENER CONNECTION REQUIREMENTS FOR ALL WOOD FRAMING ELEMENTS.

W10. MINIMUM ELEMENT PROPERTIES AS FOLLOWS:

CONVENTIONAL LUMBER	ENGINEERED LUMBER	
SPECIES: SPRUCE PINE-FIR NO. 2	SPECIES: LVL	GLULAM: SP_26F-1.9E
Fb: 875 PSI	Fb: 2,600 PSI	Fb: 2,500 PSI
Fc⊥: 450 PSI	Fc⊥: 750 PSI	Fc⊥: 1,600 PSI
Fv: 135 PSI	Fv: 285 PSI	Fv: 565 PSI
E: 1,400,000 PSI	E: 1,900,000 PSI	E: 1,900,000 PSI

W11. ALL SHEATHING FOR EXTERIOR WALLS TO BE ZIP SYSTEM, STRUCTURAL I. ATTACH TO ALL SUPPORTING MEMBERS USING 8d NAILS @ 6" O.C. AT PANEL EDGES AND 12" O.C. IN FIELD OF PANEL U.N.O. ALL PANELS SHALL BE 1/2" NOMINAL THICKNESS, SPAN RATING 32/16. SEE SCHEDULES ON SHEET S800 FOR ADDITIONAL INFORMATION REGARDING ADDITIONAL FASTENERS REQUIRED AT SHEAR WALL ELEMENTS.

12. ALL PLYWOOD AND OSB SHEATHING FOR ROOFS TO BE APA RATED EXPOSURE 1, STRUCTURAL I. ATTACH SHEATHING TO SUPPORTING MEMBERS USING 10d NAILS @ 6" O.C. AT PANEL EDGES AND 12" Ø/C. IN FIELD OF PANEL U.N.O. PROVIDE 1/8" GAP BETWEEN ADJACENT PANELS. PROVIDE MINIMUM OF 3 SPAN CONDITION. ORIENT PLYWOOD STRENGTH AXIS OF PLYWOOD PERPENDICULAR TO FRAMING ELEMENTS. STAGGER PANEL END JOINTS. SEE SPECIFICS BELOW FOR DIFFERENT TYPES AND LOCATIONS.

A. FLAT ROOFS: TYPE CDX, 4-PLY, 3/4" NOMINAL THICKNESS, SPAN RATING 40/20. PROVIDE "PSCL" CLIPS AT MID-SPAN OF UNSUPPORTED EDGES OF PANELS. CONTRACTOR OPTION: TYPE OSB, 3/4" NOMINAL THICKNESS, SPAN RATING 40/20.

WOOD FRAMING SYMBOLS & NOMENCLATURE

Wa. H1/H1M DENOTES WOOD HEADER. SEE HEADER SCHEDULE ON SHEET S800.

Wb. P1 DENOTES WOOD POST. SEE SCHEDULE ON SHEET S800.

Wc. CR1 DENOTES CRIPPLE STUD. SEE SCHEDULE ON SHEET S800.

Wd. K1 DENOTES KING STUD. SEE SCHEDULE ON SHEET S800.

We. WSWALL-1 DENOTES WOOD SHEARWALL. SEE SCHEDULE ON SHEET S800.

CODE AND LOADING

A. DESIGN REQUIREMENTS AND STRUCTURAL LOADS ARE TO BE IN ACCORDANCE WITH THE 2018 INTERNATIONAL BUILDING CODE AND ANY VILLAGE AMENDMENTS.

B. LOADING CRITERIA:

1. OCCUPANCY GROUP: U

2. OCCUPANCY CATEGORY: II

3. ROOF LOADS:
a. GROUND SNOW LOAD (P_g) = 25 PSF
b. FLAT-ROOF SNOW LOAD (P_f) = 21 PSF
c. SNOW EXPOSURE FACTOR (C_e) = 1.0
d. SNOW IMPORTANCE FACTOR (I_s) = 1.0
e. THERMAL FACTOR (C_t) = 1.2

5. WIND LOADS:
d. BASIC WIND SPEED (V) = 115 MPH
e. IMPORTANCE FACTOR (I) = 1.00
f. EXPOSURE CATEGORY = B
g. ENCLOSURE CLASSIFICATION = ENCLOSED
h. MWFRS = 20 PSF
i. COMPONENTS AND CLADDING = 25 PSF
j. ROOFTOP STRUCTURES & EQUIPMENT = 35 PSF

6. SEISMIC CRITERIA:
a. IMPORTANCE FACTOR (I) = 1.00
b. MAPPED SPECTRAL RESPONSE (S_s & S_1) = 16.0%g & 6.6%g
c. SPECTRAL RESPONSE COEF. (S_{DS} & S_{D1}) = .171 & .106
d. DESIGN CATEGORY = B
e. SITE CLASS = D
f. BASIC RESISTING SYSTEM= WOOD SHEAR WALLS, Rw=6.5
g. RESPONSE COEFFICIENT (Cs) = 0.026W
h. ANALYSIS PROCEDURE = EQUIVALENT LATERAL FORCE

DRAFTING LEGEND

PIER DETAIL LETTER / SHEET NUMBER	A / S402		NOT CONTINUOUS SOLID BLOCKING, REFER TO DETAILS
ELEVATION NUMBER / SHEET NUMBER	2 / S710		EARTH
SECTION NUMBER / SHEET NUMBER	1 / S510		CONCRETE
LOCATION ELEVATION	1ST FLR. / 100'-0"		INSULATION RIGID
SPOT ELEVATION	T/SLAB 100'-0"		FOUNDATION DEPRESSION
WOOD SHEAR WALL TAG	WS-WALL 1		ASPHALT PAVEMENT
SPREAD FOOTING TAG	SF6.0		
KEYNOTE IDENTIFICATION	0.000		ROOF/FLOOR FRAME FOR FRAMED OPENING (NO DECK /SLAB)
CONTINUOUS SOLID BLOCKING			ROOF/FLOOR FRAME FOR OPENING W/ PIPING/CONDUITS REQ'D TO BE SLEEVED AND FIRE CAULKED

Kluber
Architects + Engineers
Kluber, Inc.
Aurora, Illinois 60506
tel. 630.466.9213
Bloomington, Illinois 61704
tel. 309.430.9460
www.klubertec.com

SUBAT NATURE CENTER
KENDALL COUNTY FOREST PRESERVE DISTRICT
4975 ELDAMAIN ROAD
PLANO, IL 60545

ISSUED	
04/10/24	OWNER REVIEW
04/11/24	BID DOCUMENTS

JOB NO.	23-429-1495
DRAWN	KSG
CHECKED	JMB
APPROVED	JMB

SHEET TITLE
GENERAL NOTES CODE & LOADING, TESTING & INSPECTIONS

SHEET NUMBER
S010

NOTE: SCALES DEPICTED ON THIS DRAWING ARE NOT CORRECT UNLESS PLOTTED SHEET SIZE IS 30 X 42 INCHES.

Copyright © 2024 KLUBER, INC.

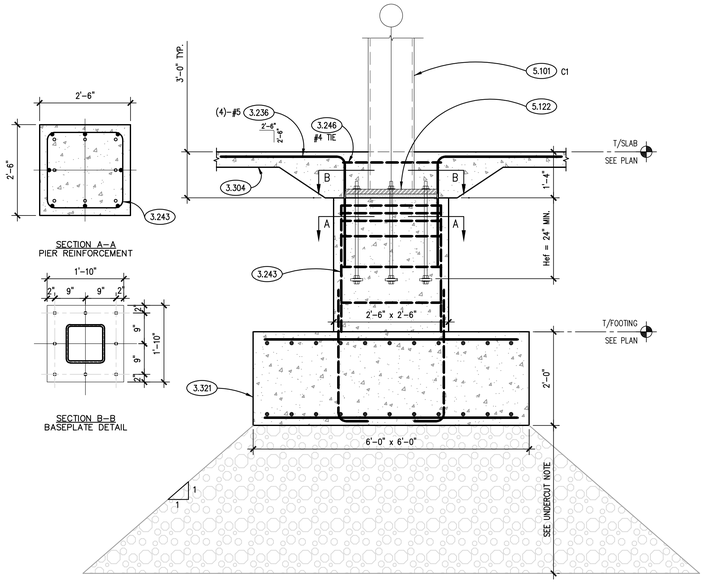

UNDERCUT NOTE: SOIL BEARING CAPACITY SHALL BE CONFIRMED AT THE TIME OF EXCAVATION PRIOR TO FORMING SPREAD FOOTINGS. SHOULD AN ALLOWABLE BEARING CVAPACITY OF 3,000 PSF NOT BE DETERMINED, UNDERCUTTING AND BACKFILL OF ENGINEERED FILL SHALL BE PERFORMED IN ACCORDANCE WITH SOILS REPORT. FOR BIDDING PURPOSES, AN ESTIMATED UNDERCUT OF 3'-0" SHALL BE ASSUMED FOR ALL FOUR CANOPY FOOTINGS.

TYPICAL SPREAD FOOTING SECTION (4)

SCALE: N.T.S.

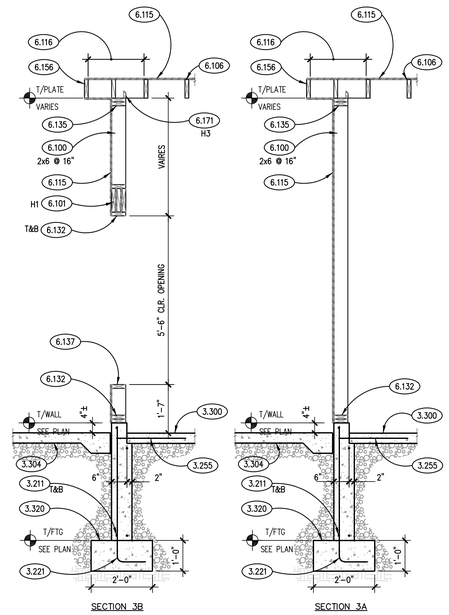

SECTION AT SHED (3)

SCALE: 1/2" = 1'-0"

NOTE: SECTION IS PORTRAYING FRAMING CONDITIONS AT NORTH WALL OF WEST SHED BEYOND. SIMILAR LOCATIONS DO NOT HAVE DISPLAY WINDOW OPENING, AND STANDARD WALL FRAMING AS DEPICTED IN SECTION 2 SHALL BE COMPLETED.

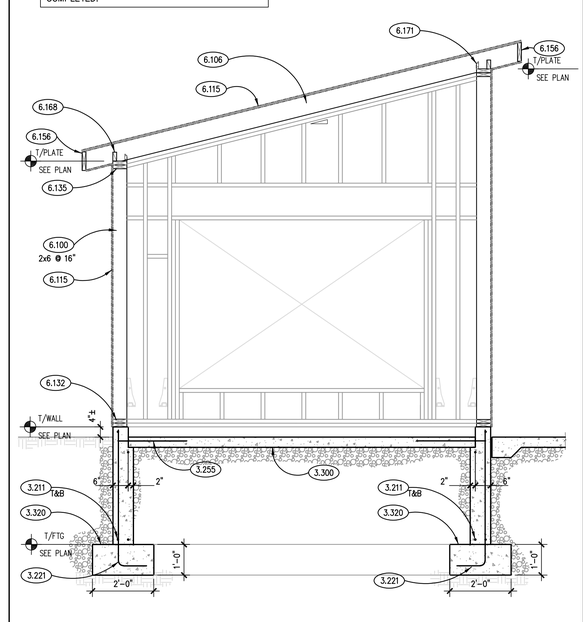

SECTION AT SHED (2)

SCALE: 1/2" = 1'-0"

KEYNOTES

KEYNOTES ARE TYPICALLY NOT DUPLICATED WITHIN A GIVEN DETAIL. AN UN-KEYNOTED ITEM IN A DETAIL IS THE SAME AS A KEYNOTED ITEM HAVING THE SAME APPEARANCE WITHIN THE SAME DETAIL.

3.211 CONCRETE REINFORCING: CONTINUOUS WALL/FOOTING REINFORCING. REFER TO SECTIONS AND SCHEDULES. PROVIDE (2)-#5 BARS U.N.O. OR DEPICTED.
3.221 CONCRETE REINFORCING: #4 DOWELS @ 1'-4" O.C. HORIZONTAL LEG= 1'-0", VERTICAL LEG= 4'-6" U.N.O.
3.236 CONCRETE REINFORCING: #5 PIER DOWELS AS NOTED HOOKED INTO FOOTING.
3.240 CONCRETE REINFORCING: #5 VERTICAL BARS HOOKED INTO FOOTING (QUANTITY AS DEPICTED) AND #4 TIES @ FOLLOWING SPACING...(3) @ 2", (1) @ 4", R @ 12" U.N.O. PIER DIMENSIONS AS NOTED.
3.243 CONCRETE REINFORCING: #6 VERTICAL BARS HOOKED INTO PILE CAP (QUANTITY AS DEPICTED) AND #4 TIES @ FOLLOWING SPACING...(3) @ 2", (1) @ 4", R @ 12" U.N.O. PIER DIMENSIONS AS NOTED.
3.246 CONCRETE REINFORCING: PROVIDE AS NOTED.
3.255 CONCRETE REINFORCING: #4 DOWEL X 2'-0" @ 1'-6" O.C. U.N.O. ANCHOR INTO EXISTING SLAB/WALL/FOOTING USING INJECTION ADHESIVE/EPOXY SYSTEM PER PROJECT SPECIFICATIONS. EMBEDMENT TO BE 4" U.N.O.
3.300 CAST-IN-PLACE CONCRETE: INTERIOR SLAB-ON-GRADE. REFER TO PLAN, SCHEDULE AND SPECIFICATIONS FOR THICKNESS, REINFORCING, MIX TYPE AND FINISH.
3.304 CAST-IN-PLACE CONCRETE: EXTERIOR SLAB-ON-GRADE. REFER TO SPECIFICATIONS FOR MIX TYPE AND FINISH. REFER TO PLAN & SCHEDULE FOR REINFORCING. REFER TO PLAN AND ARCHITECTURAL DRAWINGS FOR ELEVATIONS AND SLOPES.
3.310 CAST-IN-PLACE CONCRETE: FOUNDATION WALL. REFER TO PLAN, DETAILS AND SPECIFICATIONS FOR THICKNESS, REINFORCING, MIX TYPE AND FINISH.
3.319 CAST-IN-PLACE CONCRETE: 8"ø x 4'-0" LONG SONOTUBE ANCHORAGE FOUNDATION; PROVIDE (4)-#4 VERTICAL BARS & (2)-#3 CLOSED LOOP STIRRUPS AT TOP 4" OF PIER; COORDINATE WITH ARCHITECTURAL FABRICATION DETAILS FOR REQUIRED MATERIALS TO BE CAST INTO TOP OF PIERS.
3.320 CAST-IN-PLACE CONCRETE: CONTINUOUS WALL FOOTING. REFER TO PLAN, SCHEDULE AND SPECIFICATIONS FOR THICKNESS, REINFORCING AND MIX TYPE.
3.321 CAST-IN-PLACE CONCRETE: SPREAD FOOTING. REFER TO PLAN, SCHEDULE AND SPECIFICATIONS FOR THICKNESS, SIZE, REINFORCING AND MIX TYPE.

5.101 STRUCTURAL STEEL: STEEL COLUMN. REFER TO PLAN AND SCHEDULE.
5.122 STRUCTURAL STEEL: BASEPLATE & SETTING PLATE. REFER TO COLUMN SCHEDULE.

6.100 WOOD FRAMING: LOAD BEARING WALL. SEE PLAN, SCHEDULE AND DETAILS FOR SIZE, SPECIES AND SPACING.
6.101 WOOD FRAMING: BEAM/HEADER. SEE PLAN, SCHEDULE AND DETAILS FOR SIZE AND SPECIES. FIR OUT SIDES TO MATCH WALL THICKNESS WHERE APPLICABLE.
6.105 WOOD FRAMING: FULL HEIGHT POST/COLUMN. SEE PLAN, SCHEDULE AND DETAILS FOR SIZE, SPECIES AND QUANTITY.
6.106 WOOD FRAMING: ROOF JOIST. SEE PLAN, SCHEDULE AND DETAILS FOR SIZE, SPECIES AND SPACING.
6.115 WOOD FRAMING: APA RATED SHEATHING. SEE PLAN, SCHEDULE AND DETAILS FOR TYPE, THICKNESS AND ATTACHMENT REQUIREMENTS.
6.116 WOOD FRAMING: OUTRIGGER 2x FRAMING @ 16" O.C.; MATCH SIZE OF SURROUNDING JOIST FRAMING; PROVIDE 2x BLOCKING BETWEEN OUTRIGGERS ALONG WALL PLATE.
6.132 WOOD FRAMING: CONTINUOUS PRESSURE TREATED SILL PLATE. SIZE AND SPECIES TO MATCH WALL FRAMING. ATTACH TO FOUNDATION WALL WITH 1/2"#x8" LONG + 3" HOOKED ANCHOR RODS @ 4'-0" O.C. U.N.O.
6.135 WOOD FRAMING: CONTINUOUS DOUBLE TOP PLATE. SIZE AND SPECIES TO MATCH WALL FRAMING. PROVIDE (2)-16d NAILS INTO EACH STUD FOR LOWER TOP PLATE. ATTACH UPPER TOP PLATE USING (2)-16d NAILS @ 2'-0" O.C. LAP LOWER TOP PLATE SPLICES MINIMUM OF 2'-0". CORNERS AND INTERSECTIONS TO BE OVERLAPPED WITH A MINIMUM OF (4)-16d NAILS.
6.137 WOOD FRAMING: CONTINUOUS SINGLE TOP PLATE.
6.156 WOOD FRAMING: CONTINUOUS RIM BOARD TO MATCH JOIST DEPTH. ANCHOR INTO JOIST ENDS WITH (4)-16d NAILS.
6.168 WOOD FRAMING: PROVIDE SOLID 2x4 BLOCKING BETWEEN JOISTS; ATTACH USING (2)-16d NAILS @ EACH END.
6.171 WOOD FRAMING ACCESSORY: LIGHT GAUGE WOOD CONSTRUCTION CONNECTOR AS NOTED MANUFACTURED BY SIMPSON STRONG-TIE OR EQUAL INSTALL PER MANUFACTURER'S RECOMMENDATIONS. PROVIDE NAIL TYPE AND QUANTITIES RESULTING IN THE MAXIMUM TABULATED CAPACITIES.
6.177 WOOD FRAMING ACCESSORY: SHEARWALL HOLDDOWN ANCHOR. SEE SHEARWALL SCHEDULE.

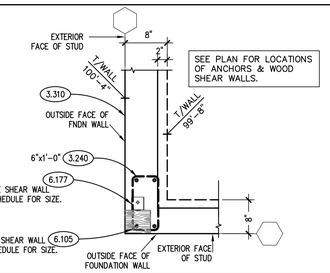

FNDN WALL REINFORCEMENT DETAIL (6)

SCALE: N.T.S.

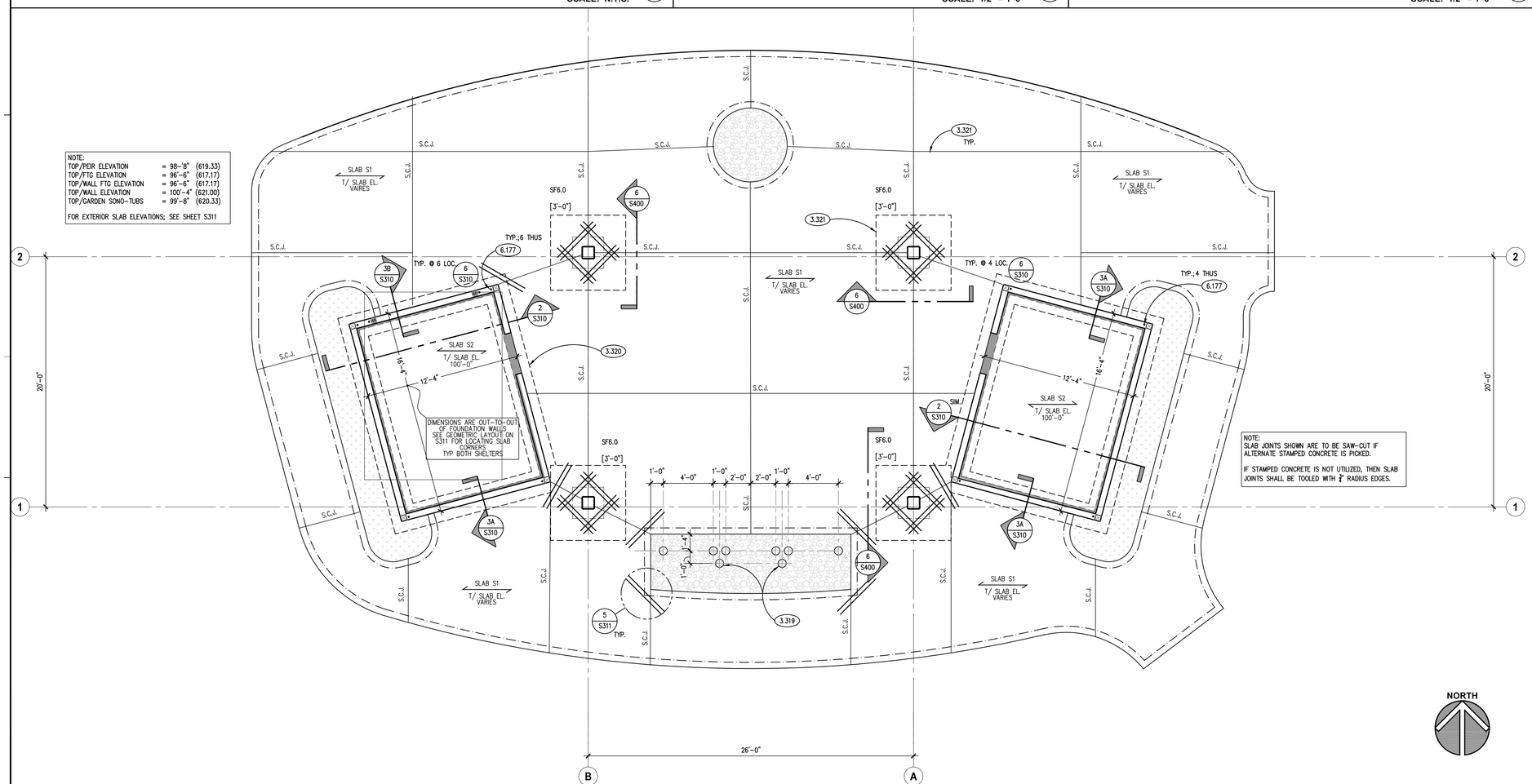

NOTE:
SLAB JOINTS SHOWN ARE TO BE SAW-CUT IF ALTERNATE STAMPED CONCRETE IS PICKED.

IF STAMPED CONCRETE IS NOT UTILIZED, THEN SLAB JOINTS SHALL BE TOOLED WITH ½" RADIUS EDGES.

FOUNDATION AND SLAB PLAN (1)

SCALE: 1/4" = 1'-0"

SPREAD FOOTING SCHEDULE

F brg.=3,000 PSF
f'c= 4,000 PSI
fy= 60,000 PSI

MARK	DIMENSIONS			REINFORCING STEEL			SPECIAL COMMENTS
	LENGTH (L)	WIDTH (B)	THICK (t)	BOTTOM LENGTH (L)	BOTTOM WIDTH (B)	TOP	
SF6.0	6'-0"	6'-0"	2'-0"	(11)-#5	(11)-#5	YES	

SPREAD FOOTING NOTES AND DETAILS

NOTES:
1. SEE PLAN FOR FOOTING LOCATIONS.
2. FOOTING SIZES BASED UPON NOTE F12 INDICATED ON SHEET S010. FOOTINGS TO BEAR ON UNDISTURBED SOILS/ENGINEERED FILL ASSUMED TO BE AT THE DESIGN ELEVATIONS NOTED ON THE PLANS.
3. CONTRACTOR TO HAVE A QUALIFIED SOIL TESTING AGENCY CONFIRM THE SOIL AT THE BASE OF THE FOOTING EXCAVATIONS PRIOR TO CASTING THE CONCRETE. ALL UNSUITABLE MATERIALS TO BE REMOVED AND REPLACED IN ACCORDANCE WITH THE PROJECT SOILS REPORT.
4. CENTERLINE OF FOOTING TO BE CENTERED ON COLUMNS, PIERS AND WALLS U.N.O. ON PLAN.

DETAILS:

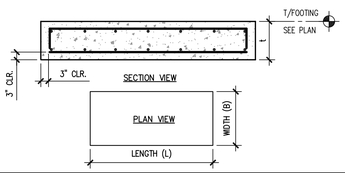

SLAB SCHEDULE AND NOTES

MARK	THICK (t)	CONCRETE STRENGTH (f'c)	CONCRETE TYPE (NW or LW)	REINFORCING STEEL	GENERAL LOCATIONS	SPECIAL COMMENTS OR ADDITIONAL LOCATIONS
SLAB S1	5"	4,500 PSI	NW	WWF-6x6 W2.1xW2.1	EXTERIOR SLAB ON GRADE	ALL EDGES TO BE THICKENED, SEE DETAIL 4/S311
SLAB S2	4"	4,000 PSI	NW	WWF-6x6 W2.1xW2.1	TYP. INTERIOR SLAB ON GRADE	

NOTES:
1. SEE PROJECT SPECIFICATIONS FOR DETAILED MIX DESIGNS.
2. PREPARE ALL SLAB ON GRADE SUB-GRADES AS INDICATED ON SHEET S010.
3. ALL SLABS ON GRADE TO BE PLACED OVER 6" OF CLEAN, WELL GRADED GRANULAR MATERIALS AS INDICATED ON SHEET S010.
4. SEE PLANS AND DETAILS FOR ALL LOCATIONS OF REINFORCING STEEL, CONTRACTION JOINTS, CONSTRUCTION JOINTS AND ISOLATION JOINTS.
5. ALL INTERIOR SLAB ON GRADE AREAS REQUIRE A 10 MIL. VAPOR BARRIER PLACED DIRECTLY OVER THE GRANULAR SUB-BASE U.N.O. SEE PROJECT SPECIFICATIONS FOR ADDITIONAL INFORMATION.
6. ALL WWF REINFORCING TO BE IN FLAT SHEETS ONLY. PLACEMENT (I.E. SUPPORT SPACING, LAP SPLICE LENGTHS, ETC.) TO BE IN ACCORDANCE WITH THE STRUCTURAL WELDED WIRE REINFORCEMENT MANUAL OF STANDARD PRACTICE: (WWR-500); WIRE REINFORCEMENT INSTITUTE; LATEST EDITION.
7. ALL REINFORCING STEEL TO BE SUPPORTED AS REQUIRED TO MAINTAIN THE DETAILED POSITIONS NOTED ON THE CONTRACT DOCUMENTS DURING PLACEMENT OF THE CONCRETE.
8. REINFORCING BARS SHALL BE ASTM A615 GRADE 60, DEFORMED. ALL WWF SHALL BE ASTM A185, SMOOTH.
9. NORMAL WEIGHT CONCRETE (NW) SHALL HAVE A MAXIMUM DENSITY OF 145 PCF.
10. EXTERIOR CONCRETE TO HAVE 6% AIR ENTRAINMENT.
11. SEE CIVIL DRAWINGS FOR ALL SIDEWALKS.

Kluber
Architects + Engineers
Kluber, Inc.
Aurora, Illinois 60506
tel. 630.466.9213
Bloomington, Illinois 61704
tel. 309.430.9460
www.klubertec.com

SUBAT NATURE CENTER

KENDALL COUNTY FOREST PRESERVE DISTRICT
4975 ELDAMAIN ROAD
PLANO, IL 60545

ISSUED	
04/10/24	OWNER REVIEW
04/11/24	BID DOCUMENTS

JOB NO.	23-429-1495
DRAWN	KSG
CHECKED	JMB
APPROVED	JMB

SHEET TITLE

FOUNDATION & SLAB PLAN, SECTIONS AND DETAILS

SHEET NUMBER

S310

NOTE: SCALES DEPICTED ON THIS DRAWING ARE NOT CORRECT UNLESS PLOTTED SHEET SIZE IS 30 X 42 INCHES.

Copyright © 2024 KLUBER, INC.

NOTE: EACH NORTH/SOUTH & EAST/WEST TERMINATING CHORD END HAS BEEN LOCATED OFF OF THE CANOPY GRID LINES. THE ARC HEIGHTS OR CIRCULAR SAGITTA DIMENSIONS TAKEN ORTHOGONAL FROM EACH CHORD TO ITS CORRESPONDING ARC HAS BEEN PROVIDED FOR DEVELOPMENT OF RADIAL EDGES.

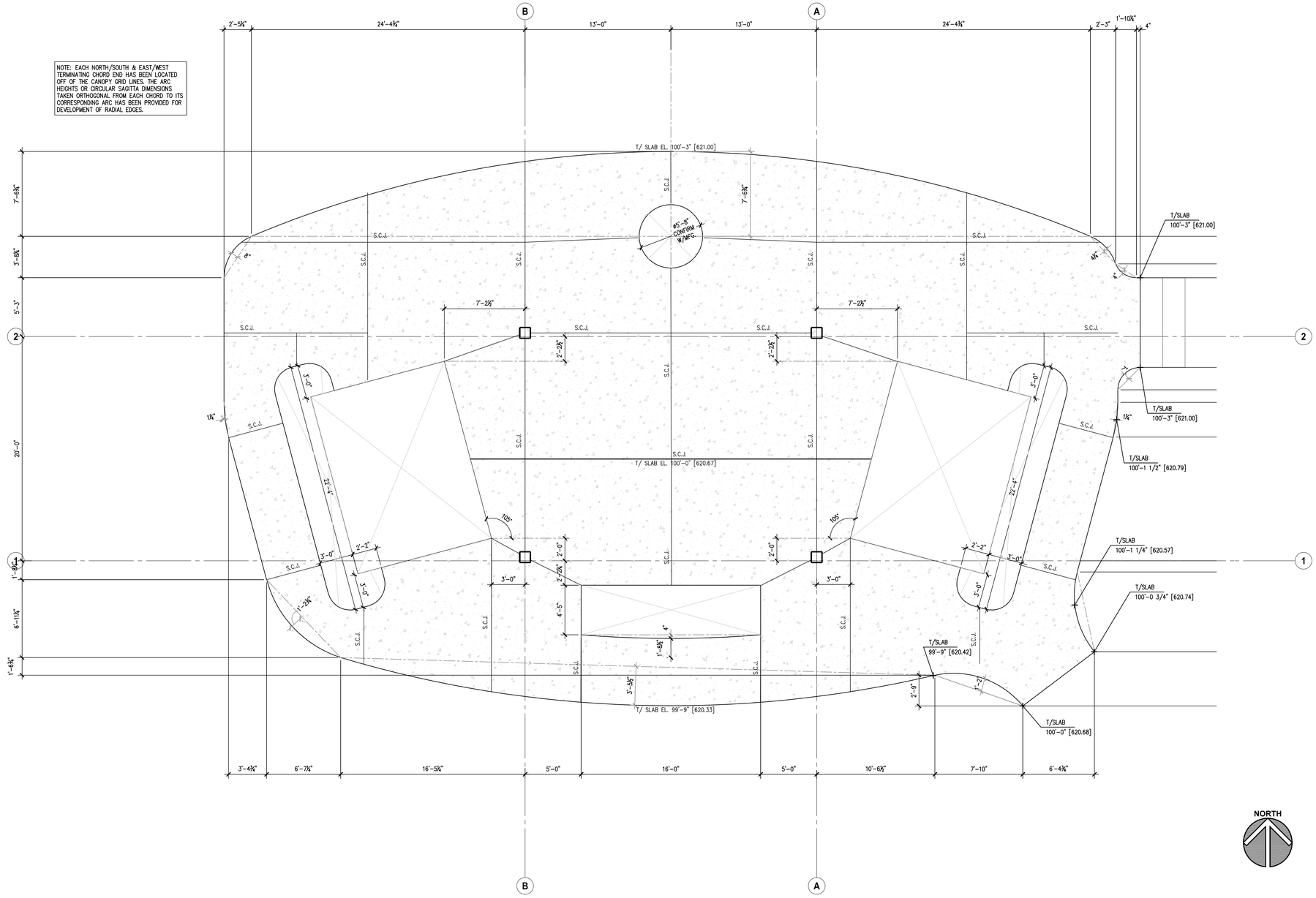

SLAB GEOMETRIC PLAN AND SPOT ELEVATIONS (1)

SCALE: 1/4" = 1'-0"

KEYNOTES

KEYNOTES ARE TYPICALLY NOT DUPLICATED WITHIN A GIVEN DETAIL. AN UN-KEYNOTED ITEM IN A DETAIL IS THE SAME AS A KEYNOTED ITEM HAVING THE SAME APPEARANCE WITHIN THE SAME DETAIL.

3.110 CONCRETE FORMING AND ACCESSORIES: CONTINUOUS 2x4 KEYWAY U.N.O.
3.111 CONCRETE FORMING AND ACCESSORIES: CONTINUOUS 3/4" CHAMFER U.N.O.
3.113 CONCRETE FORMING AND ACCESSORIES: CONTINUOUS RADIUS EDGE. PROVIDE 3/4" RADIUS U.N.O.
3.120 CONCRETE FORMING AND ACCESSORIES: 1/4" DIAMOND DOWEL SYSTEM @ 1'-0" O.C.
3.211 CONCRETE REINFORCING: CONTINUOUS WALL/FOOTING REINFORCING. REFER TO SECTIONS AND SCHEDULES. PROVIDE (2)-#5 BARS U.N.O. OR DEPICTED.
3.212 CONCRETE REINFORCING: LAP REINFORCING BAR TO MATCH SIZE, SPACING AND QUANTITY OF WALL/FOOTING REINFORCING.
3.213 CONCRETE REINFORCING: CORNER/INTERSECTION BARS TO MATCH SIZE, SPACING AND QUANTITY OF WALL/FOOTING REINFORCING. PROVIDE IN ALL ELEMENTS WITH LONGITUDINAL REINFORCING. REFER TO TYPICAL DETAIL ON CONTRACT DOCUMENTS.
3.214 CONCRETE REINFORCING: (2)-#4x4'-0" LONG DOWELS CENTERED ON JOINT AND SLAB/WALL DEPTH.
3.215 CONCRETE REINFORCING: REINFORCING STEEL MAT. #5 @ 12" O.C. EACH WAY U.N.O.
3.216 CONCRETE REINFORCING: CONTINUOUS REINFORCING BAR. #5 U.N.O. QUANTITY AS DEPICTED.
3.221 CONCRETE REINFORCING: #4 DOWELS @ 1'-0" O.C. HORIZONTAL LEG= 2'-6", VERTICAL LEG= 2'-6" U.N.O.
3.250 CONCRETE REINFORCING: WWF REFER TO SLAB CALLOUT ON PLAN. PROVIDE WWF-6X6 W2.1 X W2.1 IN FLAT SHEETS U.N.O. PROVIDE PROPER SUPPORT AS REQUIRED TO MAINTAIN PLACEMENT AT NOTED ELEVATION. "PULL UP" METHOD DURING SLAB PLACEMENT NOT ACCEPTABLE. DISCONTINUE AT CONTRACTION AND CONSTRUCTION JOINTS.
3.260 CONCRETE REINFORCING: REINFORCING STEEL SUPPORT ELEMENT.
3.300 CAST-IN-PLACE CONCRETE: INTERIOR SLAB-ON-GRADE. REFER TO PLAN, SCHEDULE AND SPECIFICATIONS FOR THICKNESS, REINFORCING, MIX TYPE AND FINISH.
3.303 CAST-IN-PLACE CONCRETE: EXTERIOR SLAB-ON-GRADE. REFER TO SPECIFICATIONS FOR MIX TYPE AND FINISH. REINFORCE WITH WWF-6x6 W2.1 x W2.1. SLOPE AWAY FROM BUILDING. ELEVATION AT DOOR AT MATCH INTERIOR SLAB/FINISH FLOOR ELEVATION.
3.310 CAST-IN-PLACE CONCRETE: FOUNDATION WALL. REFER TO PLAN, DETAILS AND SPECIFICATIONS FOR THICKNESS, REINFORCING, MIX TYPE AND FINISH.
3.320 CAST-IN-PLACE CONCRETE: CONTINUOUS WALL FOOTING. REFER TO PLAN, SCHEDULE AND SPECIFICATIONS FOR THICKNESS, REINFORCING AND MIX TYPE.
3.361 CAST-IN-PLACE CONCRETE JOINT DEVICE/FILLER: SLAB CONSTRUCTION JOINT.
3.362 CAST-IN-PLACE CONCRETE JOINT DEVICE/FILLER: SLAB CONTRACTION JOINT. SAWCUT 4-12 HOURS AFTER POUR. EMBEDDED PLASTIC STRIPS ALSO ACCEPTABLE.
3.363 CAST-IN-PLACE CONCRETE JOINT DEVICE/FILLER: SLAB JOINT SEALANT.

31.232 EXCAVATION FILL: ENGINEERED GRANULAR FILL.

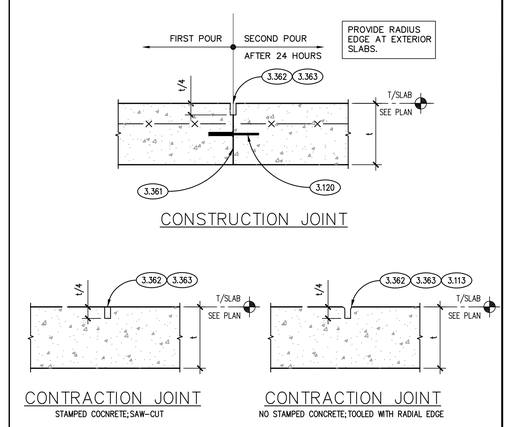

NOTE:
SLAB JOINTS SHOWN ARE TO BE SAW-CUT IF ALTERNATE STAMPED CONCRETE IS PICKED.

IF STAMPED CONCRETE IS NOT UTILIZED, THEN SLAB JOINTS SHALL BE TOOLED WITH ¼" RADIUS EDGES.

TYPICAL SLAB JOINT DETAILS (2)

SCALE: N.T.S.

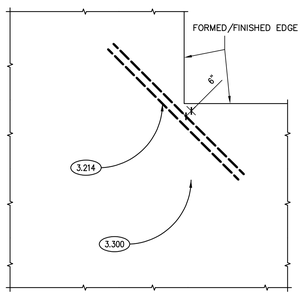

TYP. SLAB RE-ENTRANT CORNER BAR DETAIL (3)

SCALE: N.T.S.

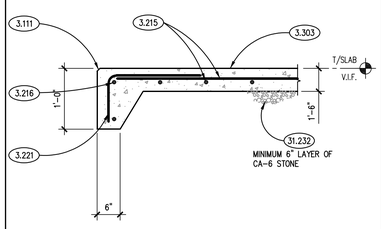

TYP. THICKENED SLAB EDGE DETAIL (4)

SCALE: N.T.S.

DETAIL IS APPLICABLE TO ALL SLABS WITH WELDED WIRE FABRIC. SEE SPECIFICATIONS & SLAB SCHEDULE FOR ADDITIONAL INFORMATION.

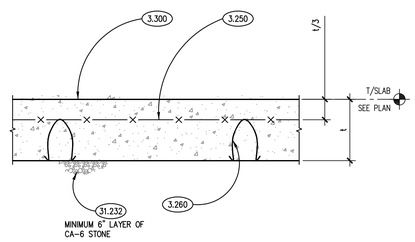

TYPICAL SLAB ON GRADE DETAIL (5)

SCALE: N.T.S.

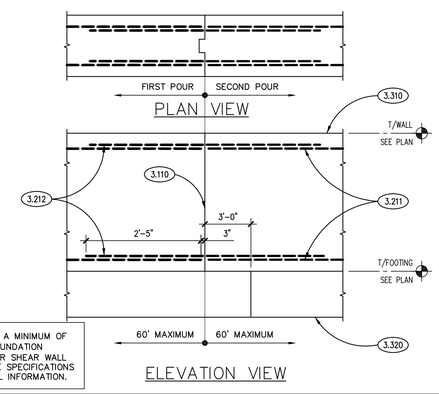

LOCATE JOINTS A MINIMUM OF 2'-0" FROM FOUNDATION DOWELS AND/OR SHEAR WALL ANCHORS. SEE SPECIFICATIONS FOR ADDITIONAL INFORMATION.

FND. WALL CONSTRUCTION JOINT DETAIL (6)

SCALE: N.T.S.

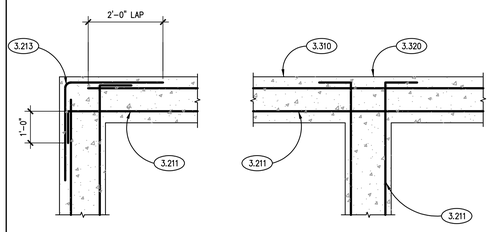

DETAILS ARE TO APPLY TO ALL ELEMENTS WITH HORIZONTAL REINFORCING INCLUDING FOUNDATION WALLS & FOOTINGS.

TYP. CORNER/INTERSECTION BAR DETAILS (7)

SCALE: N.T.S.

Kluber Architects + Engineers
Kluber, Inc.
Aurora, Illinois 60506
tel. 630.466.9213
Bloomington, Illinois 61704
tel. 309.430.0460
www.klubertec.com

SUBAT NATURE CENTER

KENDALL COUNTY FOREST PRESERVE DISTRICT
4975 ELDAMAIN ROAD
PLANO, IL 60545

ISSUED	
04/10/24	OWNER REVIEW
04/11/24	BID DOCUMENTS

JOB NO.	23-429-1495
DRAWN	KSG
CHECKED	JMB
APPROVED	JMB

SHEET TITLE

GEOMETRIC SLAB PLAN & FOUNDATION SECTION AND DETAILS

SHEET NUMBER

S311

NOTE: SCALES DEPICTED ON THIS DRAWING ARE NOT CORRECT UNLESS PLOTTED SHEET SIZE IS 30 X 42 INCHES.

Copyright © 2024 KLUBER, INC.

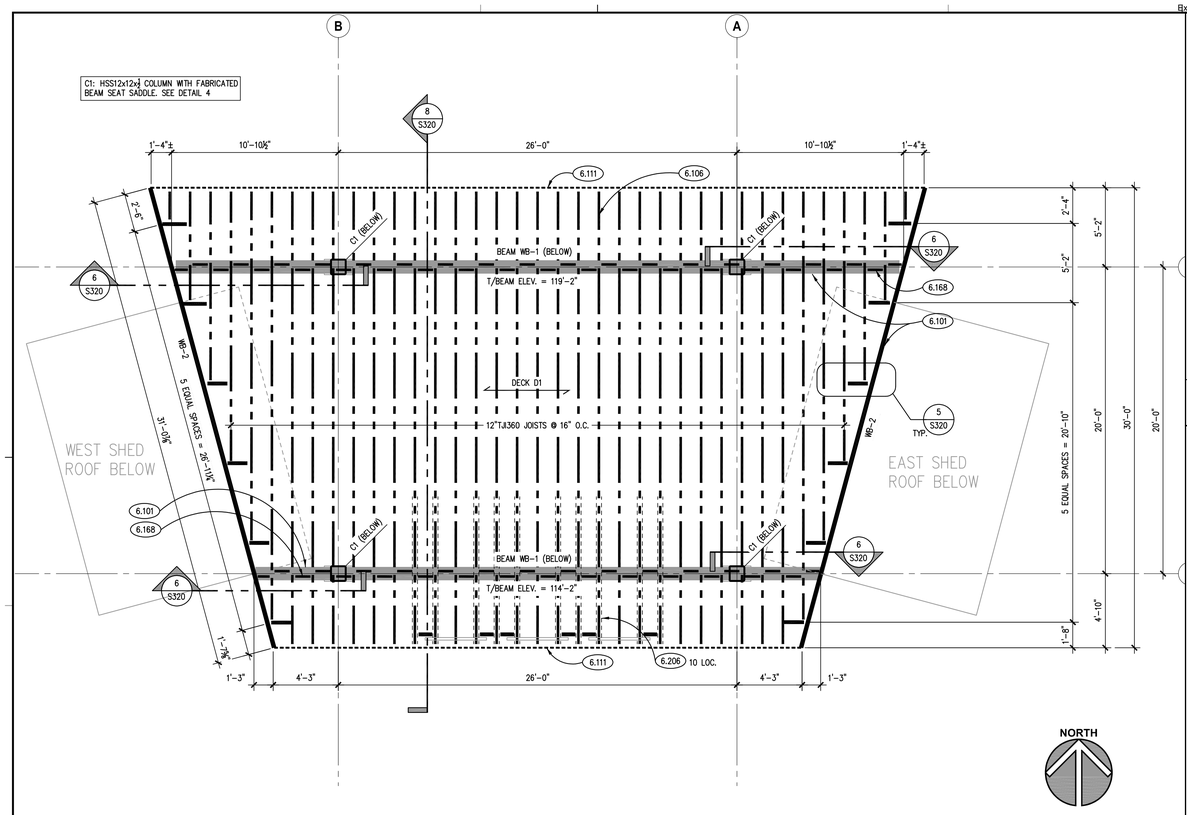

CANOPY FRAMING PLAN (1)
SCALE: 1/4" = 1'-0"

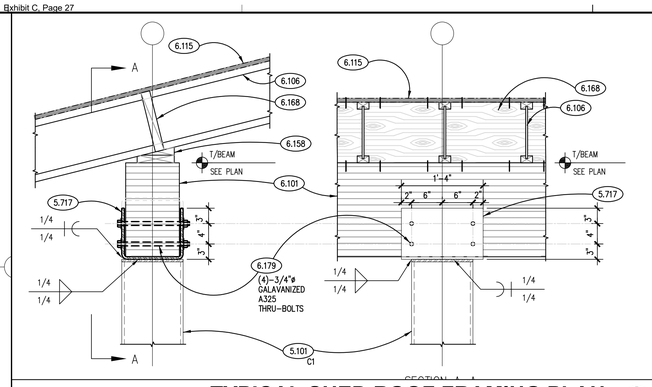

TYPICAL SHED ROOF FRAMING PLAN (4)
SCALE: 1" = 1'-0"

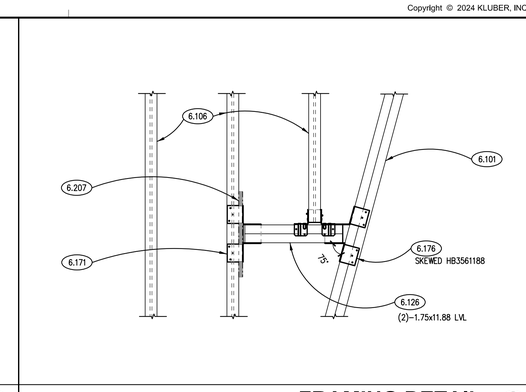

FRAMING DETAIL (5)
SCALE: 1" = 1'-0"

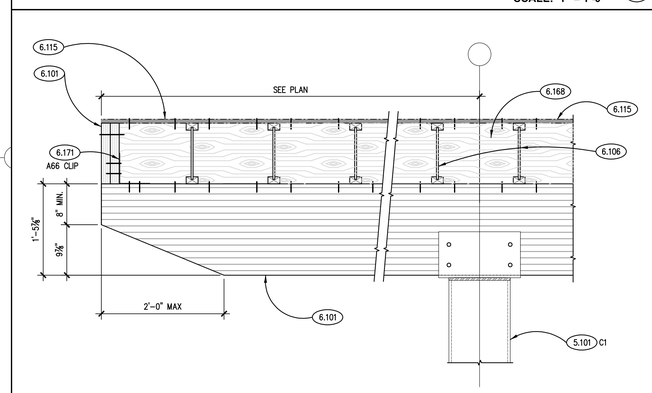

TYPICAL SHED ROOF FRAMING PLAN (6)
SCALE: 1" = 1'-0"

SECTION (7)
SCALE: 1" = 1'-0"

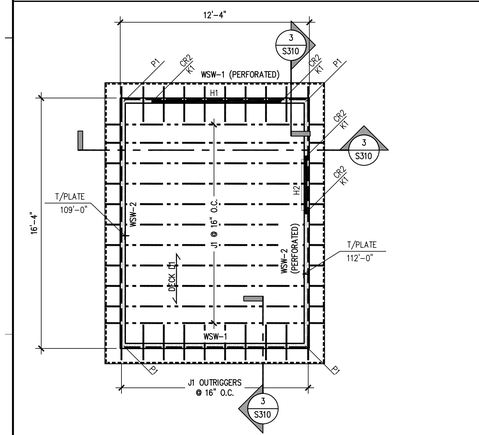

EAST SHED ROOF FRAMING PLAN (2)
SCALE: 1/4" = 1'-0"

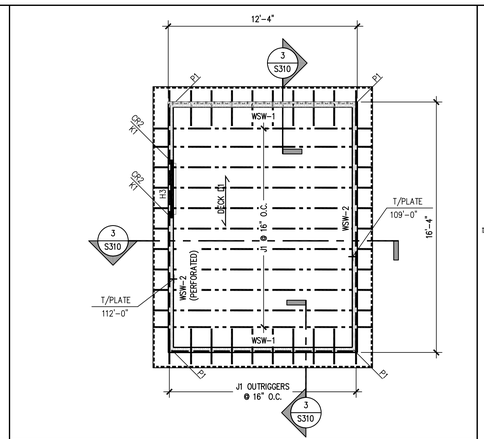

WEST SHED ROOF FRAMING PLAN (3)
SCALE: 1/4" = 1'-0"

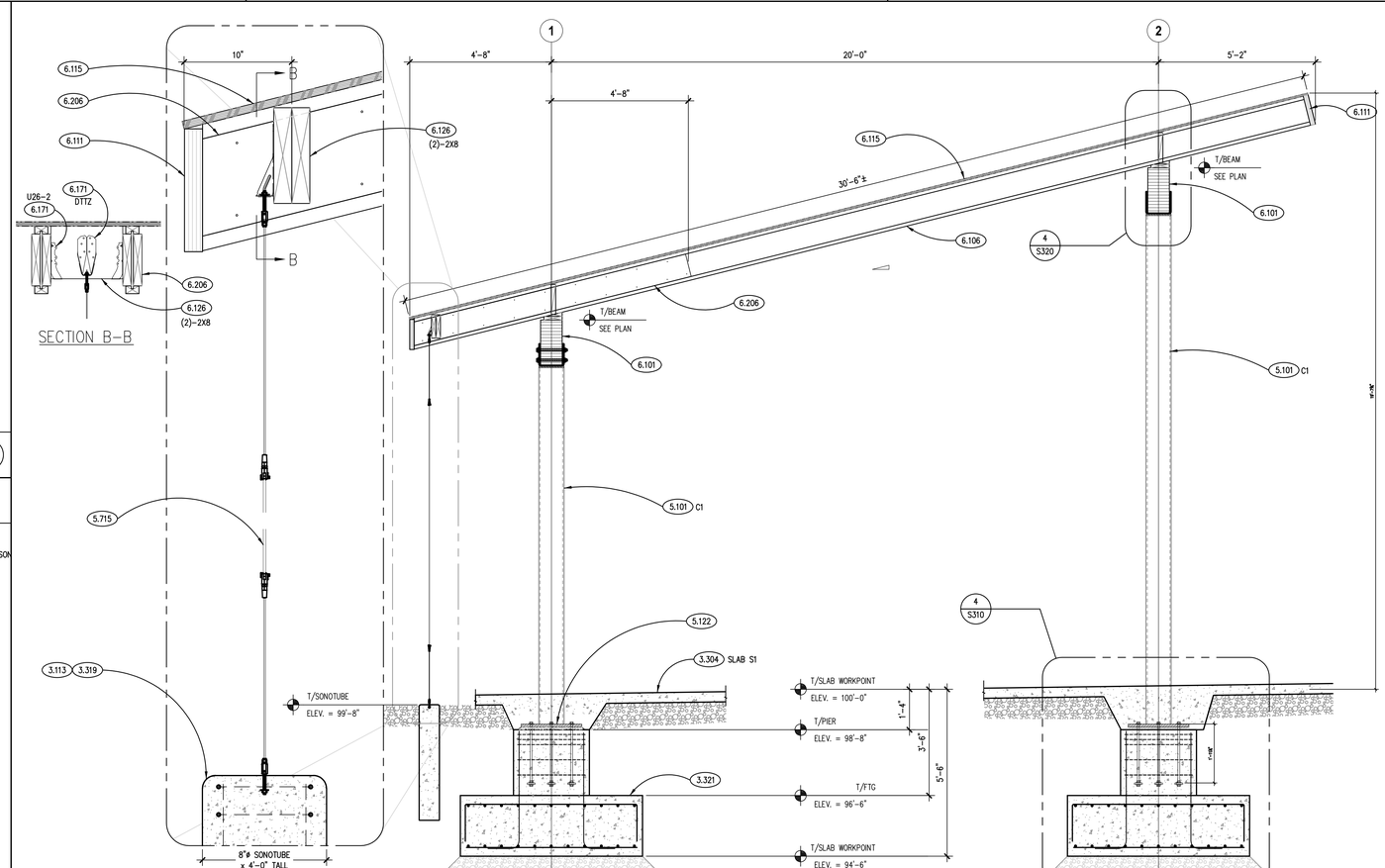

SECTION (8)
SCALE: 1/2" = 1'-0"

KEYNOTES

KEYNOTES ARE TYPICALLY NOT DUPLICATED WITHIN A GIVEN DETAIL. AN UN-KEYNOTED ITEM IN A DETAIL IS THE SAME AS A KEYNOTED ITEM HAVING THE SAME APPEARANCE WITHIN THE SAME DETAIL.

3.113 CONCRETE FORMING AND ACCESSORIES: CONTINUOUS RADIUS EDGE. PROVIDE 3/4" RADIUS U.N.O.
3.304 CAST-IN-PLACE CONCRETE: EXTERIOR SLAB-ON-GRADE. REFER TO SPECIFICATIONS FOR MIX TYPE AND FINISH. REFER TO PLAN & SCHEDULE FOR REINFORCING. REFER TO PLAN AND ARCHITECTURAL DRAWINGS FOR ELEVATIONS AND SLOPES.
3.319 CAST-IN-PLACE CONCRETE: 8"ø x 4'-0" LONG SONOTUBE ANCHORAGE FOUNDATION; PROVIDE (4)-#4 VERTICAL BARS & (2)-#3 CLOSED LOOP STIRRUPS AT TOP 4" OF PIER; COORDINATE WITH ARCHITECTURAL FABRICATION DETAILS FOR REQUIRED MATERIALS TO BE CAST INTO TOP OF PIERS.
3.321 CAST-IN-PLACE CONCRETE: SPREAD FOOTING. REFER TO PLAN, SCHEDULE AND SPECIFICATIONS FOR THICKNESS, SIZE, REINFORCING AND MIX TYPE.

5.101 STRUCTURAL STEEL: STEEL COLUMN. REFER TO PLAN AND SCHEDULE.
5.122 STRUCTURAL STEEL: BASEPLATE & SETTING PLATE. REFER TO COLUMN SCHEDULE.
5.715 METAL FABRICATION: DECORATIVE ART PANELS. SEE ARCHITECTURAL DRAWINGS FOR MORE INFORMATION FOR DISPLAY AND SUSPESION SYSTEM.
5.717 METAL FABRICATION: 16" LONG STEEL BEAM SADDLE FABRICATED FROM COLUMN SECTION; PROVIDE THRU-BOLT HOLES AS DEPICTED AND FABRICATED TO TOP OF COLUMN VIA SHOP WELDING AS DEPICTED. ALL STEEL TO BE GALAVANIZED.

6.101 WOOD FRAMING: BEAM/HEADER. SEE PLAN, SCHEDULE AND DETAILS FOR SIZE AND SPECIES. FIR OUT SIDES TO MATCH WALL THICKNESS WHERE APPLICABLE.
6.106 WOOD FRAMING: ROOF JOIST. SEE PLAN, SCHEDULE AND DETAILS FOR SIZE, SPECIES AND SPACING.
6.111 WOOD FRAMING: CONTINUOUS PERIMETER LSL PRESSURE TREATED RIM BOARD (2 SIDES) TO MATCH DEPTH OF JOISTS/BEAMS. ATTACH TO EACH JOIST/BEAM USING (5)-16d NAILS. CANTILEVER ENDS BEYOND LAST JOIST/BEAM AS REQUIRED TO SUPPORT SIDE RIM BOARDS. INSIDE CORNERS OF FRONT LSL AND SIDE LSL TO HAVE (2) A35 FRAMING ANGLES AS MANUFACTURED BY SIMPSON OR EQUAL. BEAR SIDE LSL RIM BOARD ON WALL FRAMING. CONTRACTOR OPTION: IN LIEU OF LSL, PROVIDE (2)-2x8 PRESSURE TREATED ELEMENTS WITH (3)-16d NAILS EACH 2x8 AT EACH JOIST/BEAM.
6.115 WOOD FRAMING: APA RATED SHEATHING. SEE PLAN, SCHEDULE AND DETAILS FOR TYPE, THICKNESS AND ATTACHMENT REQUIREMENTS.
6.126 WOOD FRAMING: HEADER BEAM AS NOTED WITH JOIST HANGER EACH END.
6.158 WOOD FRAMING: CONTINUOUS BEVELED TOP PLATE TO MATCH SLOPE OF ROOF.
6.168 WOOD FRAMING: PROVIDE SOLID 2x BLOCKING BETWEEN JOISTS; ATTACH USING (2)-16d NAILS @ EACH END.
6.171 WOOD FRAMING ACCESSORY: LIGHT GAUGE WOOD CONSTRUCTION CONNECTOR AS NOTED MANUFACTURED BY SIMPSON STRONG-TIE OR EQUAL. INSTALL PER MANUFACTURER'S RECOMMENDATIONS. PROVIDE NAIL TYPE AND QUANTITIES RESULTING IN THE MAXIMUM TABULATED CAPACITIES.
6.176 WOOD FRAMING ACCESSORY: SPECIALIZED SERIES LIGHT GAUGE WOOD CONSTRUCTION CONNECTOR AS NOTED MANUFACTURED BY SIMPSON OR EQUAL FOR THE LOADING AND MEMBER SIZES INDICATED. INSTALL PER MANUFACTURER'S RECOMMENDATIONS. REACTION FOR CONNECTOR DESIGN AS INDICATED ON THE DRAWINGS. CONNECTION MANUFACTURER TO SUBMIT CALCULATIONS AND DETAILS TO STRUCTURAL ENGINEER FOR REVIEW. PROVIDE SIGNED AND SEALED DOCUMENTS OF THE PROFESSIONAL ENGINEER PROVIDING THE CONNECTION.
6.179 WOOD FRAMING ACCESSORY: FASTENER AS NOTED.
6.206 WOOD FRAMING: JOIST REINFORCEMENT; 12"TJI230 JOIST REINFORCED WITH ADDITIONAL (2)-2x10'S (NS/FS); MILL AS REQUIRED TO FIT BETWEEN JOIST CHORDS AND FASTEN TOGETHER WITH 16d NAILS @ 12" O.C. T&B.
6.207 WOOD FRAMING: JOIST REINFORCEMENT; PROVIDE BLOCKING/SHEATHING REINFORCEMENT IN ACCORDANCE WITH JOIST MANUFACTURERS RECOMMENDATIONS FOR INSTALLATION OF LIGHT GAUGE HANGER.

Kluber Architects + Engineers
Kluber, Inc.
Aurora, Illinois 60506
tel. 630.466.9213
Bloomington, Illinois 61704
tel. 309.430.0460
www.klueberinc.com

SUBAT NATURE CENTER
KENDALL COUNTY FOREST PRESERVE DISTRICT
4675 ELDAMAIN ROAD
PLANO, IL 60545

ISSUED	
04/10/24	OWNER REVIEW
04/11/24	BID DOCUMENTS

JOB NO.	23-429-1495
DRAWN	KSG
CHECKED	JMB
APPROVED	JMB

SHEET TITLE
ROOF FRAMING PLANS SECTIONS AND DETAILS

SHEET NUMBER
S320

NOTE: SCALES DEPICTED ON THIS DRAWING ARE NOT CORRECT UNLESS PLOTTED SHEET SIZE IS 30 X 42 INCHES.

Copyright © 2024 KLUBER, INC.

MINIMUM WOOD FRAMING FASTENING SCHEDULE

CONNECTION TYPE	FASTENER TYPE, SPACING & QTY.	FASTENER LOCATION	SPECIAL COMMENTS
1. OWT TO SILL, GIRDER, PLATE, ETC.	PER MANUFACTURER	FACE NAIL	
2. OWT BRIDGING	PER MANUFACTURER	PER MANUFACTURER	
3. PLYWOOD WALL SHEATHING	8d @ 6" (EDGES), 12" (FIELD)	FACE NAIL	SEE SHEARWALL SCHEDULE
4. PLYWOOD ROOF SHEATHING	8d @ 6" (EDGES), 12" (FIELD)	FACE NAIL	SEE SHEET S010
5. SOLID BLOCKING BETWEEN OWT SEATS	(4)-16d	FACE NAIL	
6. TOP PLATE TO STUD	(2)-16d	END NAIL	
7. SILL PLATE TO STUD	(2)-16d	FACE NAIL	
8. BUILT-UP POSTS, CRIPPLES, KINGS	SEE DETAIL ON SCHEDULE	FACE NAIL	
9. BUILT-UP HEADERS & BEAMS	SEE DETAIL ON SCHEDULE	FACE NAIL	
10. HEADER & BEAM TO KING STUD	(2)-16d @ 4" VERTICALLY	FACE NAIL	
11. LEDGER BOARD TO SUPPORT	(4)-16d @ 16" VERTICALLY	FACE NAIL	
12. TOP PLATE: CORNERS/INTERSECTIONS	(3)-16d	FACE NAIL	
13. TOP PLATE: LAP SPLICES	(3)-16d @ 24"	FACE NAIL	MIN. SPLICE LENGTH=36"
14. JOIST BRIDGING	(3)-16d	FACE NAIL	OFFSET 2" FOR FACE NAIL
15. MULTIPLE SILL PLATES	(2)-16d @ 24"	FACE NAIL	
16. MISCELLANEOUS BLOCKING	(3)-16d	END NAIL	
17. JOISTS TO LEDGERS & BEAMS	TOP FLANGE JOIST HANGER	PER MANUFACTURER	* SEE APPLICABLE DETAILS
18. SILL TO CONCRETE	(2)-1/4"ø x3" TITEN SCREW @ 24"	FACE SCREW	
19. DIAGONAL BRACES & STRUTS	(3)-16d	FACE NAIL	
20. I-JOIST TO DOUBLE TOP PLATE	(2)-16d E.F.	FACE NAIL	
21. RIM BOARD TO I-JOIST	(2)-16d T&B	FACE NAIL	

MINIMUM WOOD FRAMING FASTENING SCHEDULE NOTES

NOTES:
1. MINIMUM ATTACHMENTS NOTED ABOVE ARE TO BE USED UNLESS SECTIONS, DETAILS OR NOTES INDICATE OTHERWISE.
2. MINIMUM ATTACHMENTS ARE FOR STRUCTURAL ELEMENTS. NON-STRUCTURAL ELEMENT ATTACHMENTS TO CONFORM TO THE "FASTENING SCHEDULE" IN CHAPTER 23 OF THE LATEST EDITION OF THE INTERNATIONAL BUILDING CODE.
3. IN ABSENCE OF INFORMATION ON A SPECIFIC CONNECTION TYPE, REFER TO THE "FASTENING SCHEDULE" IN CHAPTER 23 OF THE THE LATEST EDITION OF THE INTERNATIONAL BUILDING CODE.
4. SEE SCHEDULES ON THIS SHEET FOR ADDITIONAL FASTENING REQUIREMENTS.
5. ALL NAILS ARE TO BE COMMON NAILS.
6. PROVIDE CORROSIVE RESISTANT FASTENERS FOR ALL EXTERIOR APPLICATIONS.
7. * JOIST HANGERS ALWAYS REQUIRED. CONTRACTOR TO ASSUME MINIMUM HANGERS AS NOTED IN THE JOIST/TRUSS SCHEDULE.

KEYNOTES

3.211 CONCRETE REINFORCING: CONTINUOUS WALL/FOOTING REINFORCING. REFER TO SECTIONS AND SCHEDULES. PROVIDE (2)-#5 BARS U.N.O. OR DEPICTED.
3.219 CONCRETE REINFORCING: CONTINUOUS #4 NOSING BAR.
3.240 CONCRETE REINFORCING: #5 VERTICAL BARS HOOKED INTO FOOTING (QUANTITY AS DEPICTED) AND #4 TIES @ FOLLOWING SPACING...(3) @ 2", (1) @ 4", R @ 12" U.N.O. PIER DIMENSIONS AS NOTED.
3.304 CAST-IN-PLACE CONCRETE: EXTERIOR SLAB-ON-GRADE. REFER TO SPECIFICATIONS FOR MIX TYPE AND FINISH. REFER TO PLAN & SCHEDULE FOR REINFORCING. REFER TO PLAN AND ARCHITECTURAL DRAWINGS FOR ELEVATIONS AND SLOPES.
3.315 CAST-IN-PLACE CONCRETE: CONCRETE PIER. REFER TO PLAN AND DETAILS FOR REQUIRED REINFORCING. REFER TO SPECIFICATIONS FOR MIX TYPE AND FINISH.
3.320 CAST-IN-PLACE CONCRETE: CONTINUOUS WALL FOOTING. REFER TO PLAN, SCHEDULE AND SPECIFICATIONS FOR THICKNESS, REINFORCING AND MIX TYPE.
3.331 CAST-IN-PLACE CONCRETE: DRILL AND EPOXY ANCHORS. PROVIDE MINIMUM EMBEDMENT AS SHOWN. SEE SPECIFICATIONS FOR EPOXY TYPE.

6.100 WOOD FRAMING: LOAD BEARING WALL. SEE PLAN, SCHEDULE AND DETAILS FOR SIZE, SPECIES AND SPACING.
6.101 WOOD FRAMING: BEAM/HEADER. SEE PLAN, SCHEDULE AND DETAILS FOR SIZE AND SPECIES. FIR OUT SIDES TO MATCH WALL THICKNESS WHERE APPLICABLE.
6.102 WOOD FRAMING: WALL POST DIRECTLY BELOW JOIST/BEAM. SPECIES AND SIZE TO MATCH SURROUNDING WALL FRAMING U.N.O. QUANTITY OF STUDS TO MATCH WIDTH OF JOIST/BEAM U.N.O..
6.103 WOOD FRAMING: FULL HEIGHT JAMB (KING) STUD. SEE PLAN, SCHEDULE AND DETAILS FOR SIZE, SPECIES AND QUANTITY. MINIMUM REQUIREMENT TO BE ONE (1) STUD.
6.104 WOOD FRAMING: HEADER HEIGHT JAMB (CRIPPLE) STUD. SEE PLAN, SCHEDULE AND DETAILS FOR SIZE, SPECIES AND QUANTITY. MINIMUM REQUIREMENT TO BE ONE (1) STUD.
6.105 WOOD FRAMING: FULL HEIGHT POST/COLUMN. SEE PLAN, SCHEDULE AND DETAILS FOR SIZE, SPECIES AND QUANTITY.
6.113 WOOD FRAMING: 3/4 STRUCTURAL SHEATHING "H"x "L" WIDE NS/FS, GLUED AND NAILED TO BOTH FACES OF TRUSS MEMBERS WITH 10d NAILS AT 3" O.C. PLYWOOD TRANSFER GUSSET SHOULD BE CENTERED WITH AND COVER THE TOP METAL PANEL POINT AND EXTEND TO CENTERLINE OF EACH ADJACENT BOTTOM MENDING PLATE.
6.116 WOOD FRAMING: ZIP SYSTEM STRUCTURAL 1 SHEATHING. SEE PLAN, SCHEDULES AND DETAILS FOR TYPE, THICKNESS AND ATTACHMENT REQUIREMENTS.
6.120 WOOD FRAMING: PRE-FABRICATED OPEN WEB TRIM JOIST FLOOR TRUSS. SEE PLAN, SCHEDULE AND DETAILS FOR TYPE, DEPTH AND LOAD REQUIREMENTS.
6.130 WOOD FRAMING: CONTINUOUS PRESSURE TREATED SILL PLATE. SIZE AND SPECIES TO MATCH WALL FRAMING. ATTACHMENT TO BASE MATERIAL AS FOLLOWS: MASONRY/CONCRETE: (2)-1/4"ø SIMPSON TITEN SCREWS @ 2'-0" O.C. AND (1)-1/2"ø HOOKED ANCHORS @ 4'-0" O.C. U.N.O.
6.132 WOOD FRAMING: CONTINUOUS PRESSURE TREATED SILL PLATE. SIZE AND SPECIES TO MATCH WALL FRAMING. ATTACH TO FOUNDATION WALL WITH 1/2"øx8" LONG + 3" HOOKED ANCHOR RODS @ 4'-0" O.C. U.N.O.
6.133 WOOD FRAMING: JOIST GIRDER. SEE PLAN FOR SIZE.
6.135 WOOD FRAMING: CONTINUOUS DOUBLE TOP PLATE. SIZE AND SPECIES TO MATCH WALL FRAMING. PROVIDE (2)-16d NAILS INTO EACH STUD FOR LOWER TOP PLATE. ATTACH UPPER TOP PLATE USING (2)-16d NAILS @ 2'-0" O.C. LAP LOWER TOP PLATE SPLICES MINIMUM OF 2'-0". CORNERS AND INTERSECTIONS TO BE OVERLAPPED WITH A MINIMUM OF (4)-16d NAILS.
6.137 WOOD FRAMING: CONTINUOUS SINGLE TOP PLATE.
6.171 WOOD FRAMING ACCESSORY: LIGHT GAUGE WOOD CONSTRUCTION CONNECTOR AS NOTED MANUFACTURED BY SIMPSON STRONG-TIE OR EQUAL. INSTALL PER MANUFACTURER'S RECOMMENDATIONS. PROVIDE NAIL TYPE AND QUANTITIES RESULTING IN THE MAXIMUM TABULATED CAPACITIES.
6.210 WOOD FRAMING: BUILT-UP COLUMN REINFORCEMENT ELEMENT AS NOTED. SISTER NEW ELEMENT TO EXISTING W/(2)-1/4"ø x 4 1/2" (SDS25412) FASTENERS @ 8" O.C. VERTICALLY TYPICAL. ELEMENT TO BE (1 PIECE) CUT TIGHT TO FIT BETWEEN FLOOR SLAB & UNDERSIDE OF BEAM CONNECTOR.
6.211 WOOD FRAMING: BUILT-UP COLUMN REINFORCEMENT ELEMENT; CONTRACTOR TO MILL OFF TOP PORTION OF ELEMENT BACKSIDE TO MISS COLUMN CONNECTOR AND FASTERNERS AS REQUIRED.

31.232 EXCAVATION FILL: ENGINEERED GRANULAR FILL.

32.315 DECORATIVE METAL GATE POST.

WOOD POST (P), CRIPPLE (CR) AND KING (K) STUD SCHEDULE

POST MARK	POST ELEMENT SIZE	CRIPPLE MARK	CRIPPLE ELEMENT SIZE	KING MARK	KING ELEMENT SIZE
P1	6x6 POST	CR1	(1)-2x6	K1	(1)-2x6
		CR2	(2)-2x6	K2	(2)-2x6

WOOD POST (P), CRIPPLE (CR) AND KING (K) STUD SCHEDULE NOTES & DETAILS

NOTES:
1. POST INDICATOR (AS NOTED ON PLANS);
2. MULTIPLE ELEMENTS TO BE ATTACHED TOGETHER USING (2)-16d NAILS PER ROW, EACH SIDE AT SPACING NOTED. SEE TYPICAL DETAIL BELOW.
3. ELEMENT SPECIES TO MATCH TYPICAL STUD FRAMING U.N.O.
4. MINIMUM ELEMENT PROPERTIES AS FOLLOWS: SEE SHEET S010.

DETAILS:

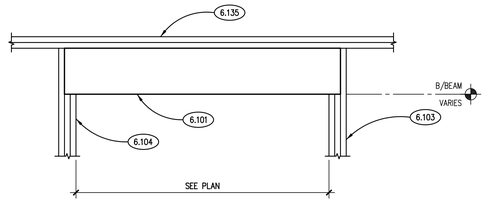

TYPICAL FRAMED BEAM OPENING DETAIL

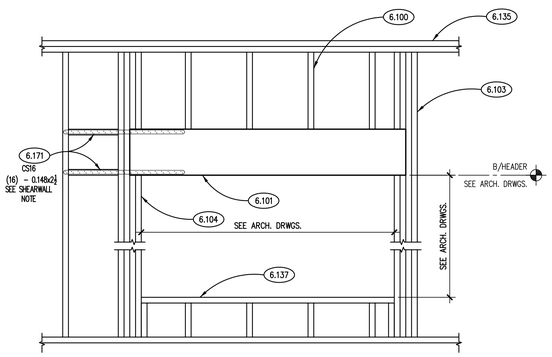

TYPICAL FRAMED HEADER OPENING DETAIL

SHEARWALL NOTE:
STRAPPING SHOWN ABOVE IS ONLY TO BE UTILIZED AT WALL OPENING LOCATIONS THAT ARE LOCATED WITHIN A PERFORATED SHEARWALL. STRAPPING SHALL OCCUR ON BOTH SIDES OF THE OPENING - ABOVE IS ONLY SHOWN ONE SIDED FOR CLARITY OF TYPICAL FRAMING CONDITIONS INDICATED AT OPPOSITE END.

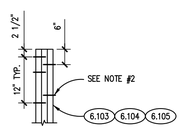

TYPICAL BUILT-UP ELEMENT DETAIL

COLUMN SCHEDULE, NOTES AND DETAILS

MARK	ELEMENT SIZE	BASEPLATE				ANCHOR ROD				REMARKS
		THICK (t)	WIDTH (B)	LENGTH (L)	WELD	DIA.	TYPE	QTY.	Le	
C1	HSS12x12x1/2	1 1/4"	1'-10"	1'-10"	5/16"	3/4"	B	8	24"	GALVANIZED

NOTES:
1. SEE PLAN FOR COLUMN LOCATIONS.
2. MATERIAL PROPERTIES:
   a. PLATES=ASTM A36
   b. HSS SHAPES=ASTM A500, GRADE B (Fy=46 KSI)
   c. ANCHOR RODS: TYPE B=A36, FULLY THREADED; TYPE AS NOTED
   d. WELDING ELECTRODES=E70xx
   e. ALL ANCHOR RODS, NUTS, WASHERS AND PLATES TO BE GALVANIZED.
   4. ANCHOR ROD TYPE "B" REQUIRES 3/8"x3"x3" WASHER PLATES AT BOTTOM.
5. MINIMUM OF (4)-ANCHOR RODS ARE REQUIRED AT EACH COLUMN AND LOCATED AT EACH CORNER U.N.O. ANCHOR ROD QUANTITIES GREATER THAN (4) ARE TO BE PLACED BETWEEN THE CORNER BOLTS AS NOTED.
6. 1/4" SETTING PLATE IS REQUIRED AT ALL LOCATIONS U.N.O. SETTING PLATE TO MATCH BASEPLATE FOOTPRINT.
7. BOTTOM OF BASEPLATE TO BE 1" (3/4" GROUT BED + 1/4" SETTING PLATE) ABOVE TOP OF PIER/FOOTING U.N.O.

DETAILS:

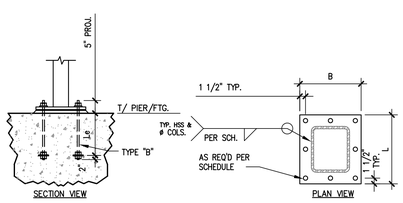

WOOD HEADER AND BEAM SCHEDULE

HEADER MARK	HEADER ELEMENT SIZE	BEAM MARK	BEAM ELEMENT SIZE	NOTES
H1	(3)-2x10	WB-1	10.5x17.875 GLULAM	
H2	(3)-2x6	WB-2	(2)-1 3/4x11.875 LVL	

WOOD HEADER AND BEAM SCHEDULE NOTES & DETAILS

NOTES:
1. ATTACH ALL TOP LOADED (AND SIDE LOADED CONVENTIONAL) MULTIPLE ELEMENTS (12" DEPTH & LESS) USING 2 ROWS OF 16d NAILS @ 12" O.C. PROVIDE 3 ROWS FOR 14" & 16" DEPTH MEMBERS AND 4 ROWS FOR 18" DEPTH MEMBERS.
2. ATTACH SIDE LOADED MULTIPLE ELEMENTS (LVL) PER THE MANUFACTURER'S REQUIREMENTS.
3. SOLID WIDTH PSL ELEMENTS CAN BE SUBSTITUTED FOR MULTIPLE ELEMENTS AT THE CONTRACTOR'S OPTION. DEPTH AND TOTAL WIDTH TO REMAIN AS NOTED.
4. CENTERLINE OF ELEMENTS TO BE THE CENTERLINE OF THE WALL U.N.O.
5. ELEMENTS TO BE FURRED OUT FLUSH TO MATCH WALL WIDTH USING SOLID WOOD PRODUCTS (ie PLYWOOD). FURRING TO BE EQUAL ON EACH SIDE OF THE ELEMENT.
6. ELEMENTS TO BEAR THE FULL LENGTH OF THE SUPPORTING POST (P) OR CRIPPLE STUD (CR) AT EACH END.
7. HEADERS WITH "M" ON PLAN INDICATES THAT HEADER IS FOR M.E.P. ITEM. COORDINATE SIZE, LOCATION AND ELEVATION WITH RESPECTIVE CONTRACTOR. PROVIDE ONE CRIPPLE STUD AT EACH END OF HEADER ATTACHED TO ADJACENT FULL HEIGHT STUDS.
8. MINIMUM ELEMENT PROPERTIES AS FOLLOWS: SEE SHEET S010.

DETAILS:

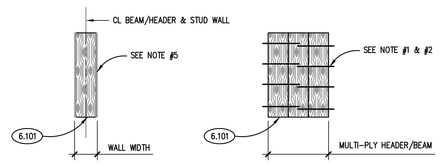

WOOD SHEARWALL SCHEDULE

MARK	PLYWOOD SHEATHING INFORMATION					MIN. END POSTS	HOLD-DOWN ANCHOR	BASE SILL ANCHORS (QTY-TYPE @ SPC'G)
	SIZE	GRADE	# OF FACES	EDGE NAILS	FIELD NAILS			
WSWALL-1	7/16"	Strd 1	1	8d @ 4"	8d @ 12"	P1	HDU4-SDS2.5 W/SET-3G W/5/8"ø F1554 GR. 55 ANCHOR(12" EMBED.)	TITEN HD 1/4"ø x 4" @ 16"
WSWALL-2	7/16"	Strd 1	1	8d @ 4"	8d @ 12"	P1	HDU4-SDS2.5 W/SET-3G W/5/8"ø F1554 GR. 55 ANCHOR(12" EMBED.)	TITEN HD 1/4"ø x 4" @ 16"

WOOD SHEARWALL SCHEDULE NOTES

NOTES:
1. SEE WOOD POST SCHEDULE FOR ADDITIONAL INFORMATION.
2. SEE SHEARWALL SHEATHING DETAIL (THIS SHEET) FOR TYPICAL PANEL LAYOUT AND ATTACHMENT. PROVIDE MINIMUM OF 2 SPAN CONDITION. ORIENT STRENGTH AXIS OF SHEATHING PERPENDICULAR TO THE WALL FRAMING.
3. PROVIDE BLOCKING AT ALL PANEL EDGES. BLOCKING TO MATCH SURROUNDING WOOD FRAMING.
4. ALL MECHANICAL FASTENERS, ANCHORS AND ATS COMPONENTS ARE AS MANUFACTURED BY SIMPSON STRONG-TIE
5. ALL SHEATHING TO BE EXPOSURE 1, MINIMUM 4-PLY, 32/16 SPAN RATING.
6. HOLD-DOWN ANCHORS TO BE INSTALLED INTO FOUNDATION WALL USING SIMPSON STRONG-TIE EPOXY-TIE SET HIGH STRENGTH EPOXY.
7. TITEN TURBO BOTTOM PLATE ANCHORS REQUIRE MINIMUM OF 2" EMBEDMENT INTO CONRETE.
8. ALL ANCHORS/HOLDOWNS ARE AS MANUFACTURED BY SIMPSON STRONG-TIE.
9. FOR PERFORATED SHEARWALLS - SEE ADDITIONAL STRAPPING DETAIL SHOWN ON TYPICAL FRAMED HEADER OPENING

WOOD SHEARWALL DETAILS

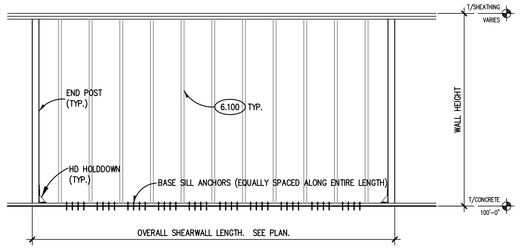

TYPICAL SHEARWALL ELEVATION DETAIL

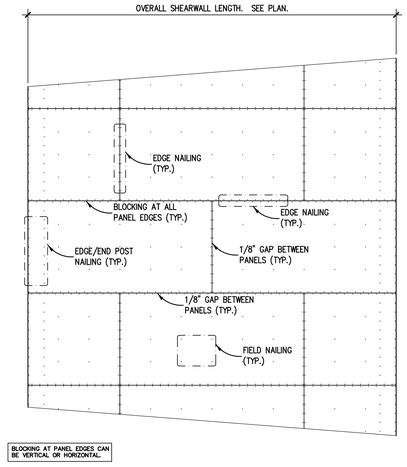

TYPICAL SHEARWALL SHEATHING DETAIL

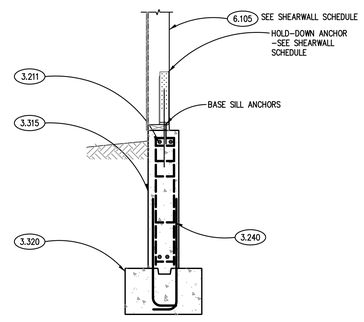

TYPICAL SHEARWALL FOUNDATION DETAIL

Kluber Architects + Engineers
Kluber, Inc.
Aurora, Illinois 60506
tel. 630.406.1213
Bloomington, Illinois 61704
tel. 309.430.0460
www.klubertec.com

SUBATI NATURE CENTER
KENDALL COUNTY FOREST PRESERVE DISTRICT
4975 ELDAMAIN ROAD
PLANO, IL 60545

ISSUED	
04/10/24	OWNER REVIEW
04/11/24	BID DOCUMENTS

JOB NO.	23-429-1495
DRAWN	KSG
CHECKED	JMB
APPROVED	JMB

SHEET TITLE
SCHEDULES, SECTIONS & DETAILS

SHEET NUMBER
S800

NOTE: SCALES DEPICTED ON THIS DRAWING ARE NOT CORRECT UNLESS PLOTTED SHEET SIZE IS 30 X 42 INCHES.